Promoting digital transformation and social innovation in VET for better access of deaf students to the labour market

2022-1-PL01-KA220-VET-000086953

3D4DEAF DUAL TRAINING PACK

Module: 3D TECHNOLOGIES

Topic 3: Hands-on practice on software

Funded by the European Union. Views and opinions expressed are however those of the author(s) only and do not necessarily reflect those of the European Union or the European Education and Culture Executive Agency (EACEA).
Neither the European Union nor EACEA can be held responsible for them.

Co-funded by the European Union

Project Number: 2022-1-PL01-KA220-VET-000086953

3D4DEAF

TOPIC:

Hands-on practice on software

SUB TOPICS:

- **Introduction to Tinkercad online software & CURA slicing software (practical part)**
- **Create your own design**
- **3D printing (finalization)**

Developed by: Emphasys CENTRE

Funded by the European Union

Funded by the European Union. Views and opinions expressed are however those of the author(s) only and do not necessarily reflect those of the European Union or the European Education and Culture Executive Agency (EACEA). Neither the European Union nor EACEA can be held responsible for them.

Project Consortium

SPOŁECZNA AKADEMIA NAUK
UNIVERSITY OF SOCIAL SCIENCES

dlearn
EUROPEAN DIGITAL LEARNING NETWORK ETS

ISTITUTO DEI SORDI
DI TORINO

PITAGORAS
STOWARZYSZENIE ROZWOJU

COLEGIO
GAUDEM
CENTRO CONCERTADO

Emphasys
CENTRE

idec

3D4DEAF

Content of presentation

- **Sub-Topic 1:** Introduction to TinkerCAD online software & CURA slicing software (practical part)
- **Sub-Topic 2:** Create your own design
- **Sub-Topic 3:** 3D printing (finalization)

Topic Description

The main objectives of this topic are for the teachers to design and visualize 3D designs/objects, functional prototyping using TinkerCAD, customization and personalization using both TinkerCAD and Cura online software, finalization of the 3D designs and printing the end product.

Learning outcomes

Sut-topic 1: Introduction to TinkerCAD online software & CURA slicing software (practical part)

Module 1: 3D Technologies Topic: Hands-on practice on software			
	KNOWLEDGE	SKILLS	ATTITUDES
	Sub-topic 1: Introduction to TinkerCAD online software & CURA slicing software (practical part)		
STARTERS	• How to use the TinkerCAD interface • How to add and customize different shapes • Introduction to Cura software	• Know how to use TinkerCAD • Know how to use Cura	• Functionality • Simplicity • Durability • Accessibility • Sustainable design

Sub-topic 1: Introduction to TinkerCAD online software & CURA slicing software

- TinkerCAD is a widely used online platform that offers a user-friendly and approachable way to generate, craft, and simulate **3D models**.
- It is a great tool suitable for newcomers, students, enthusiasts, and even professionals, and they can use it without the necessity of compex software or costly equipment.
- To visit the TinkerCAD software click on the following link: https://www.TinkerCAD.com/

Sub-topic 1: Introduction to TinkerCAD online software & CURA slicing software

- This slide is for <u>students only</u> who are trying to access the class.
- Before starting to explore the functionalities of TinkerCAD, use the <u>login or sign-up</u> to access your account. Another way to have access to TinkerCAD is through the <u>Class Code</u>, which is already set by your teacher.

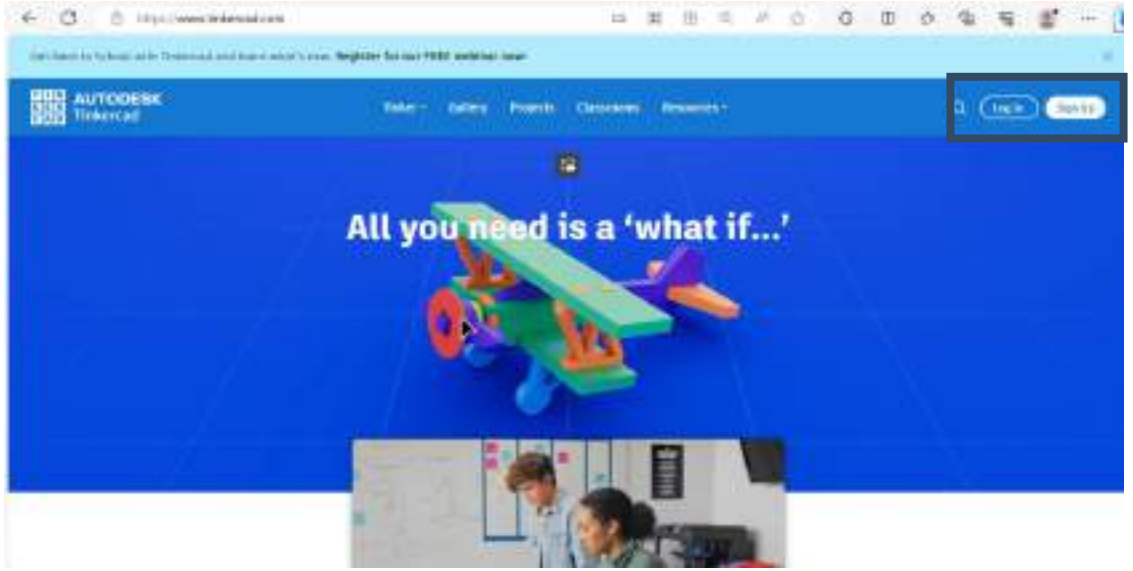

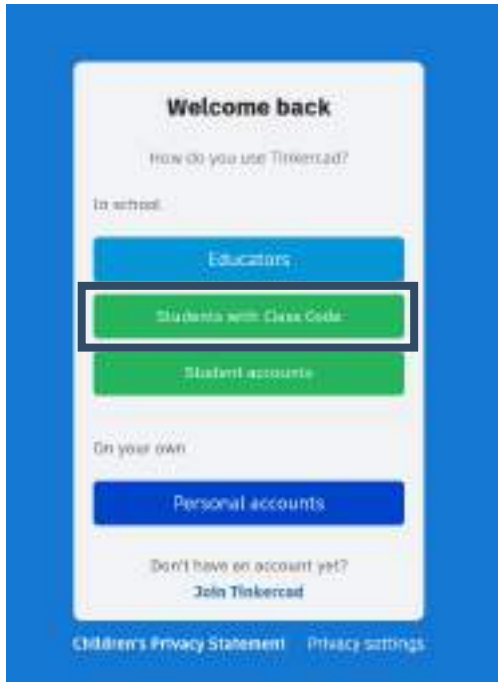

Sub-topic 1: Introduction to TinkerCAD online software & CURA slicing software

- Once you have access to your TinkerCAD account, you can see your <u>classes, create a new design, or see a tutorial.</u>

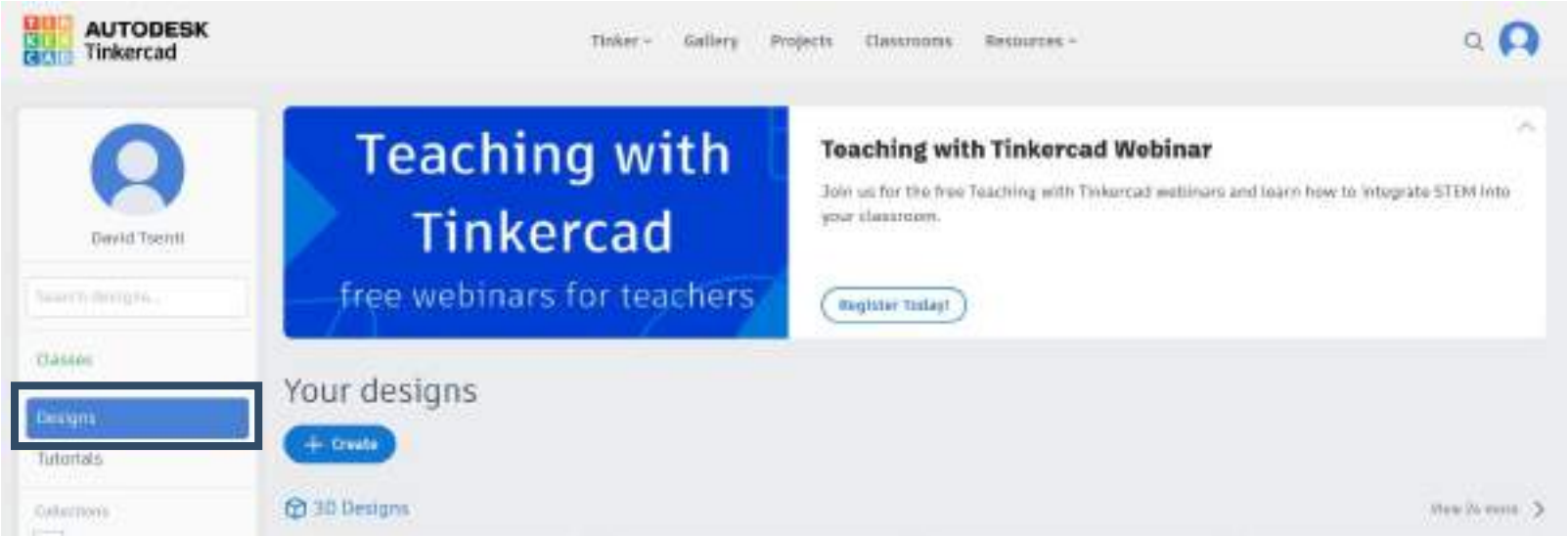

Sub-topic 1: Introduction to TinkerCAD online software & CURA slicing software

- This slide is for teachers only, to create a class on TinkerCAD
- To create a new class, click on the tab “Create new class” and fill the table with the class information.
- Then click on the new class and click on “add students” to complete the class with your students.

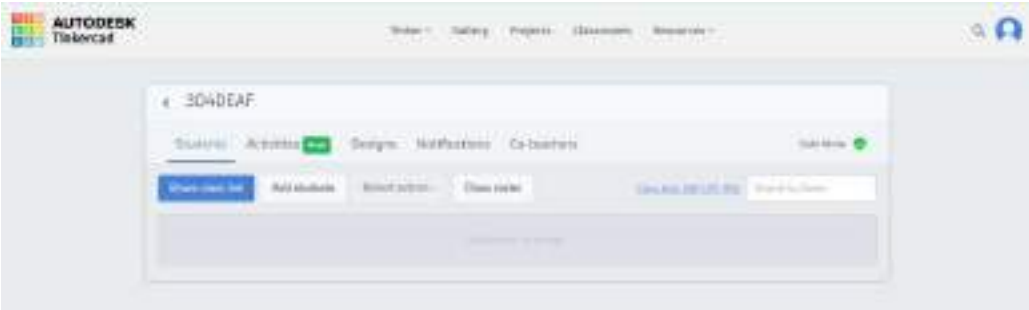

Sub-topic 1: Introduction to TinkerCAD online software & CURA slicing software

- To start a new Design, click on the “Create 3D Design” button, as shown in the image below. Once you click this button a new project is going to open up and you will see the TinkerCAD interface.

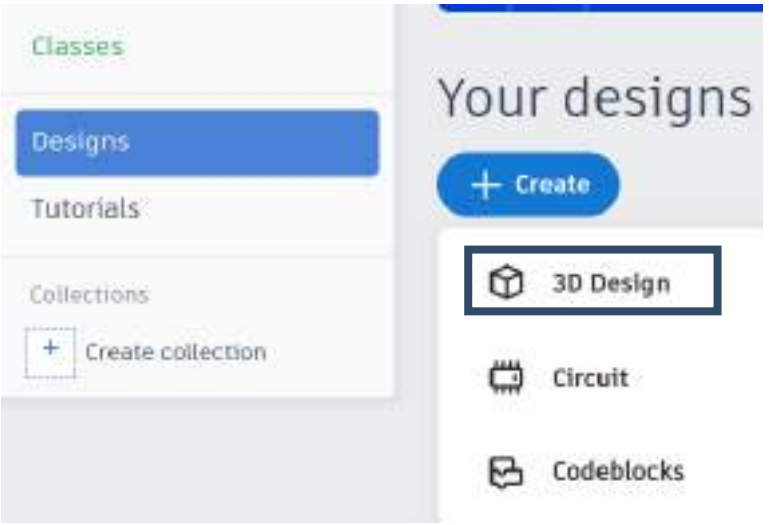

Sub-topic 1: Introduction to TinkerCAD online software & CURA slicing software

- The first and most important part of the interface is the blue Workplane in the middle. You can imagine this Workplane as a 3-Dimensional Canva where you can place your model and you will be able to see it as a 3D Object.

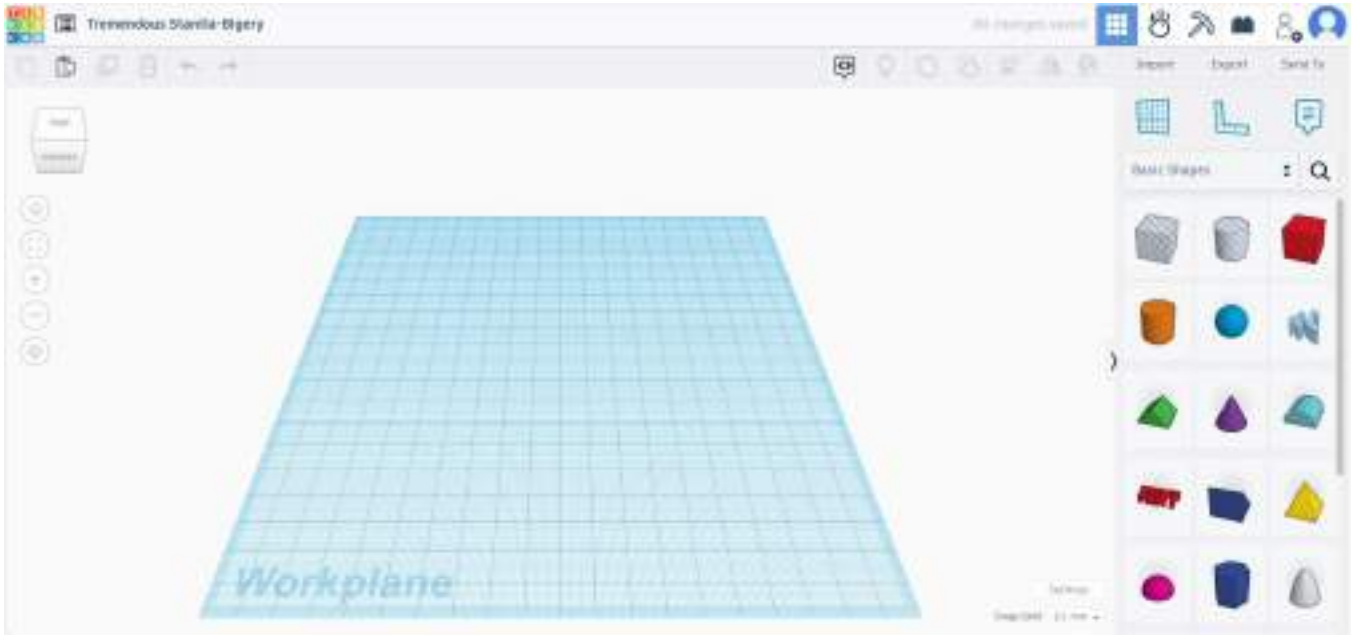

Sub-topic 1: Introduction to TinkerCAD online software & CURA slicing software

- You can also change the perspective of your Workplane. You can do that by simply pressing and holding the right click anywhere on the Workplane and moving your mouse in the desirable direction. You can also zoom in and out by using your mouse wheel.

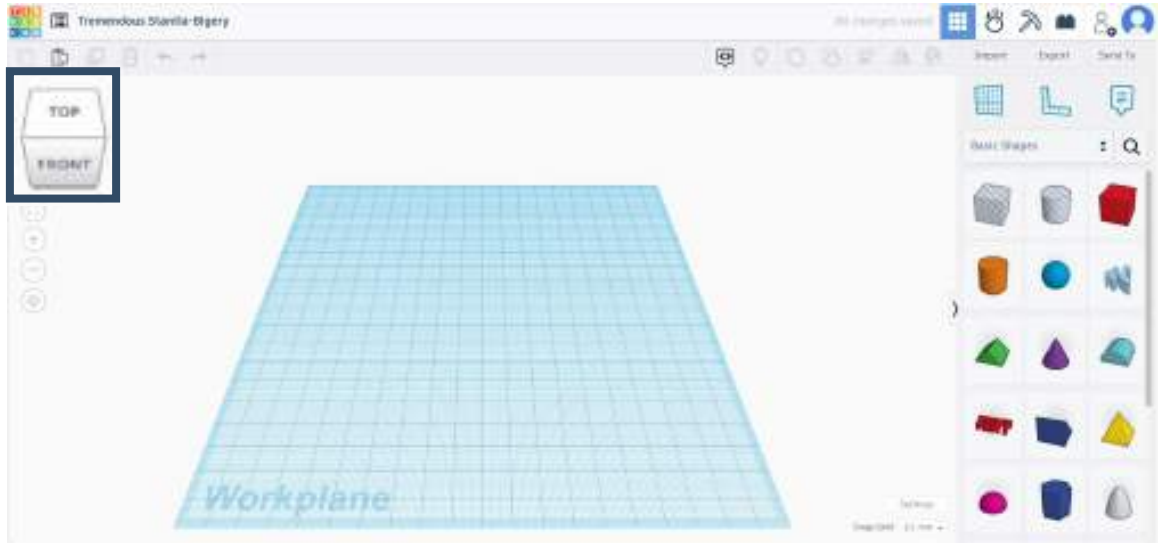

Sub-topic 1: Introduction to TinkerCAD online software & CURA slicing software

- The second most important part of the TinkerCAD interface is the section of the Basic Shapes on the right-hand side.
- In this area you can find a number of basic geometric shapes, as well as much more complex shapes which you can find by clicking the drop-down menu.

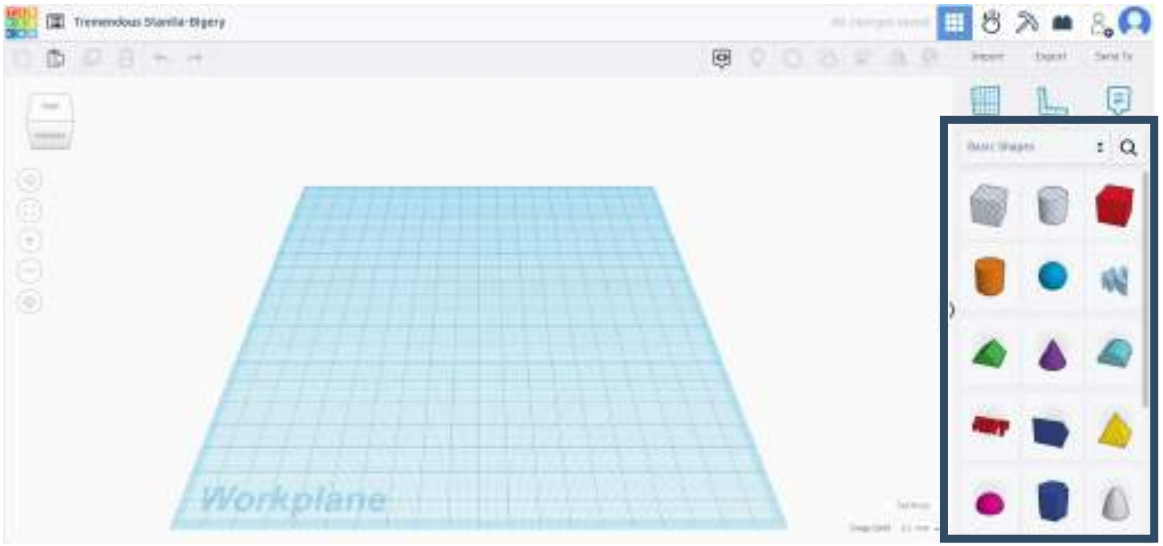

Sub-topic 1: Introduction to TinkerCAD online software & CURA slicing software

- The third part of the TinkerCAD interface that we are going to inspect is the <u>menus</u>. TinkerCAD has two menus, one on the right and another one on the left of the Interface, as shown in the image below.

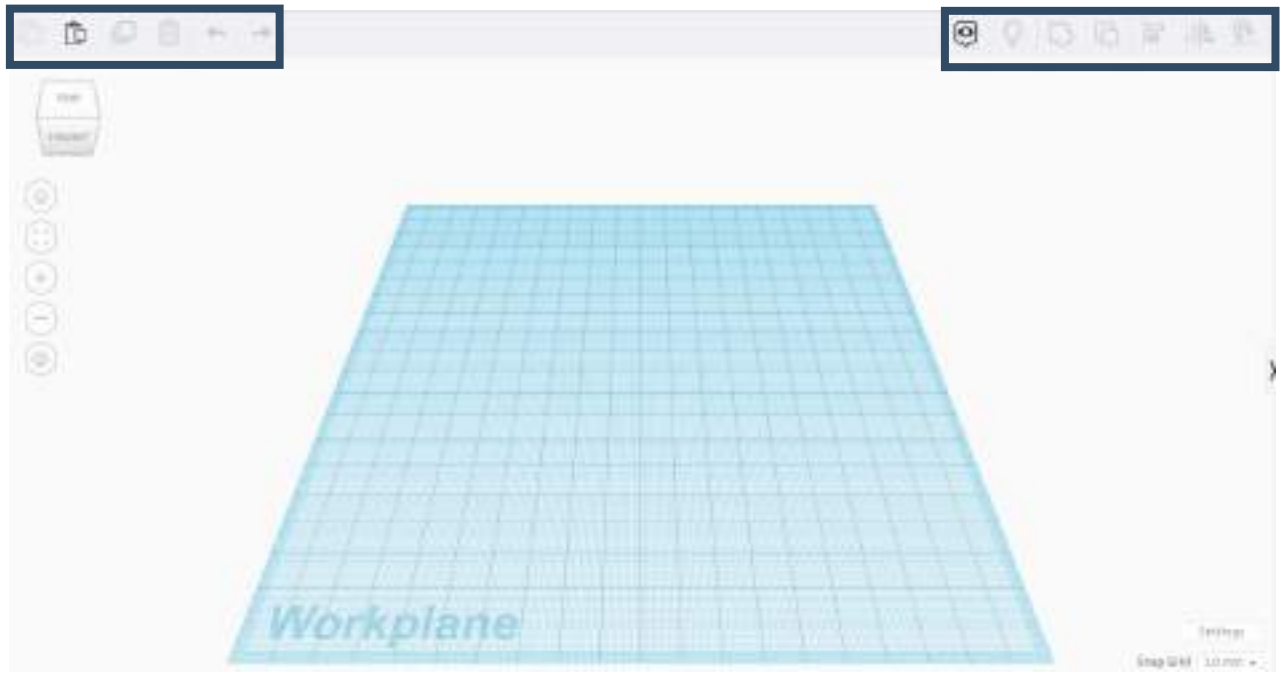

Left menu	
	Copy
	Paste
	Duplicate and Repeat
	Delete

Right menu	
	Group objects
	Ungroup objects
	Align objects
	Mirror an object

Sub-topic 1: Introduction to TinkerCAD online software & CURA slicing software

- Some other functionalities of TinkerCAD are:
  - How to import, export, or send a 3D model
  - Change the workplane and add ruler
  - Choose different shapes

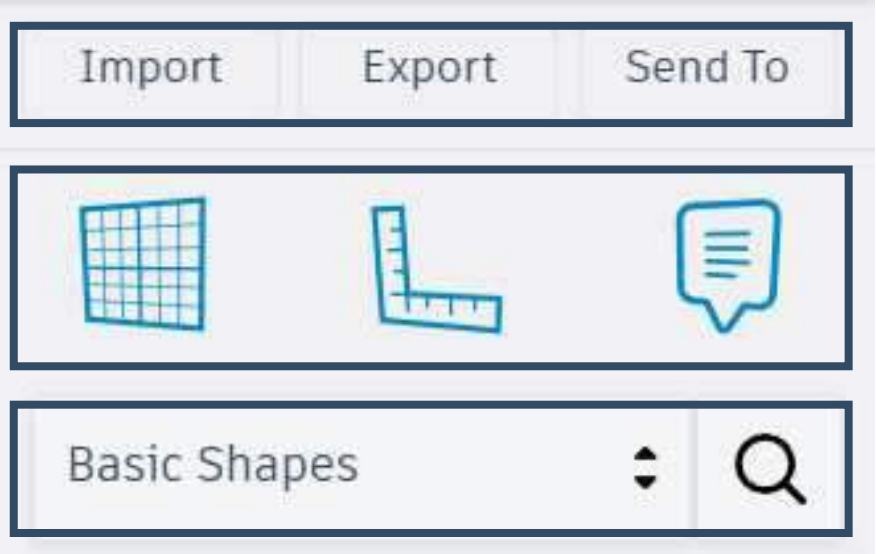

Sub-topic 1: Introduction to TinkerCAD online software & CURA slicing software

Import 3D objects in .stl format	Export 3D objects in .stl format	Send the 3D object to your computer or other 3D communities

Sub-topic 1: Introduction to TinkerCAD online software & CURA slicing software

Change the working area	Use ruler to measure the distance	Add notes to the object

Sub-topic 1: Introduction to TinkerCAD online software & CURA slicing software

- This area, contains all the shapes that the student can use and modify in the workplane.
- Apart from the “Basic Shapes” option, the student can use different shapes from all the categories.

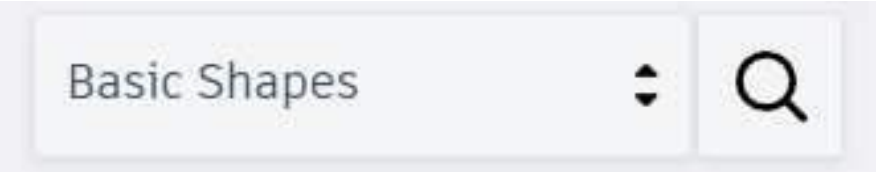

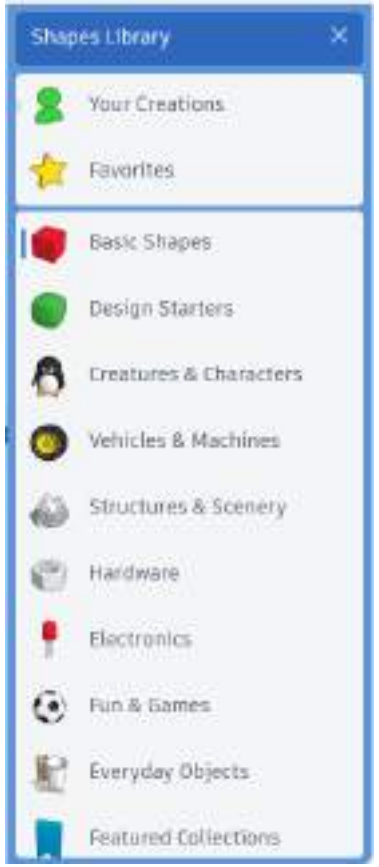

Sub-topic 1: Introduction to TinkerCAD online software & CURA slicing software

- With the above-mentioned steps on TinkerCAD we can create a 3D model on a computer file.
- After we have our model, we are ready to move on to the next stage. We need to find a way to turn our 3D model into commands that our 3D printer should follow. To do this we need to use a program known as Slicer. This slicer can read the files in **.stl format.**
- In this exercise we will use the Cura slicing software
- To download and install this Cura, this link must be used: https://ultimaker.com/software/ultimaker-cura

Sub-topic 1: Introduction to TinkerCAD online software & CURA slicing software

- To export the 3D object from TinkerCAD in a .stl format, use the above-mentioned tab “export”.
- Then click on the .STL tab and the file will be saved on your computer

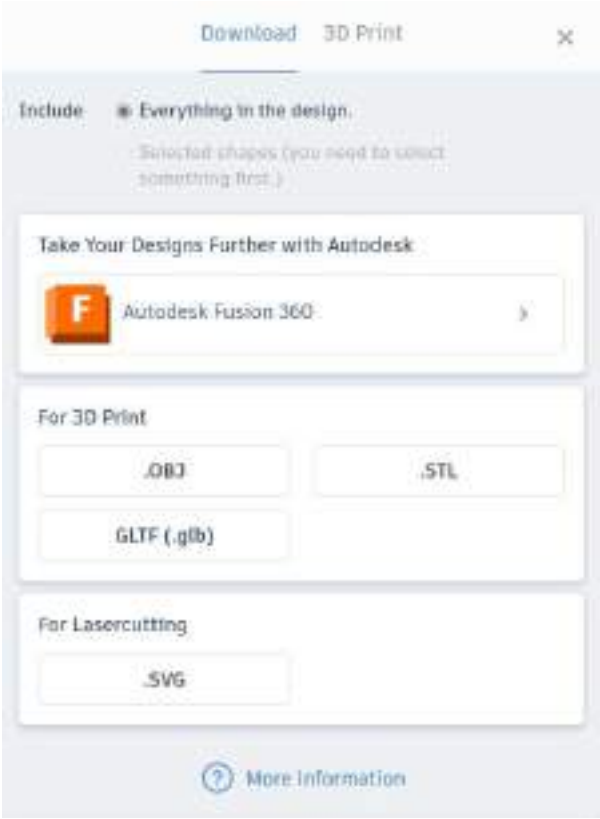

Sub-topic 1: Introduction to TinkerCAD online software & CURA slicing software

- To download the Cura software, follow the above-mentioned link and then click at ‘download for free’ tab.

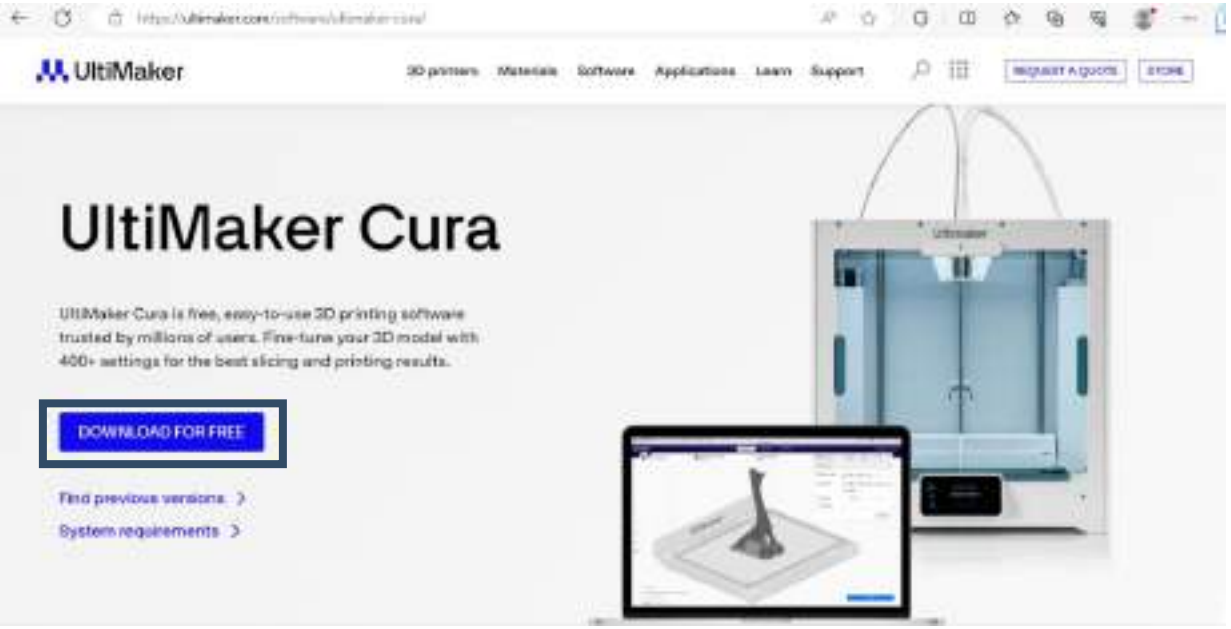

Sub-topic 1: Introduction to TinkerCAD online software & CURA slicing software

- After installing the software the following environment will appear.
- The first thing we see is a “Virtual” bed, which is identical to the bed of your actual printer.

Sub-topic 1: Introduction to TinkerCAD online software & CURA slicing software

- The three colorful lines are pointing to the “zero” spot, which means that in this spot all X,Y,Z are zero. You can change the perspective of your bed by simply pressing and holding the right click anywhere on the bed and moving your mouse into the desirable direction. You can also zoom in and out by using your mouse wheel.

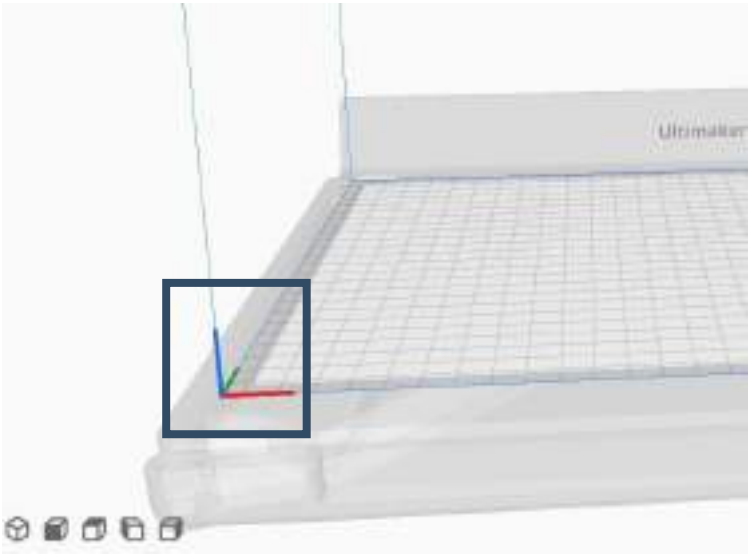

Sub-topic 1: Introduction to TinkerCAD online software & CURA slicing software

- After importing the 3D model, in .stl format, a button **Slice** will appear on the screen.
- When you click this button, the software will “slice” the 3D objects in layers in order to be readable on the 3D printer.

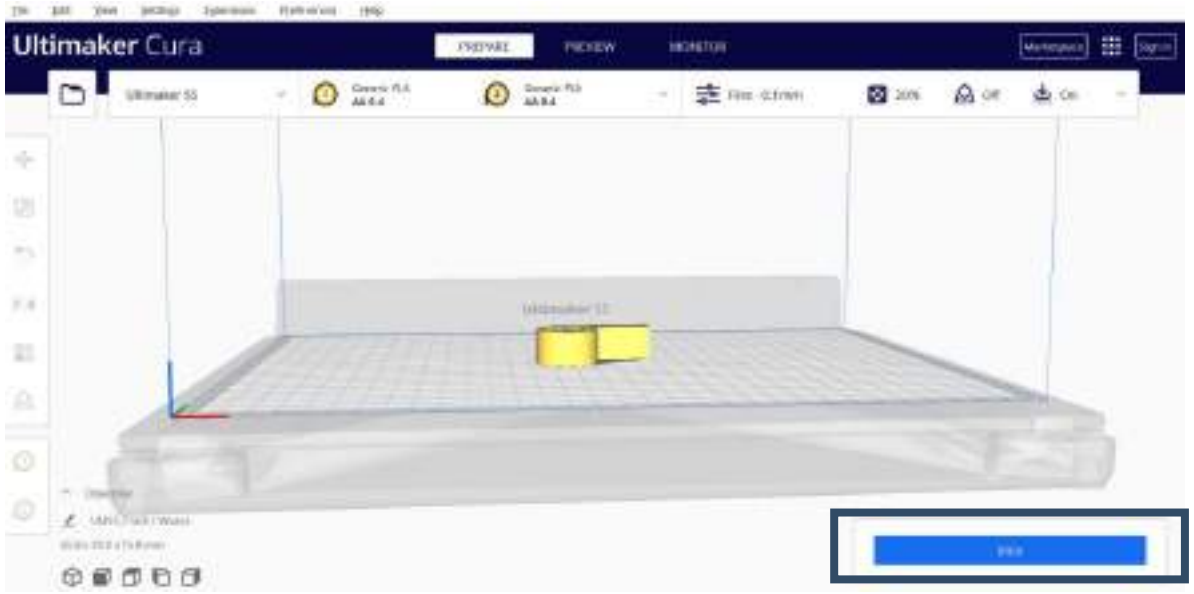

Sub-topic 1: Introduction to TinkerCAD online software & CURA slicing software

- Now our model has been placed on the “Virtual” bed.
- If we click/select on the model, a menu appears on the left side of the interface, and three arrows appear on our model representing the coordinate axes.

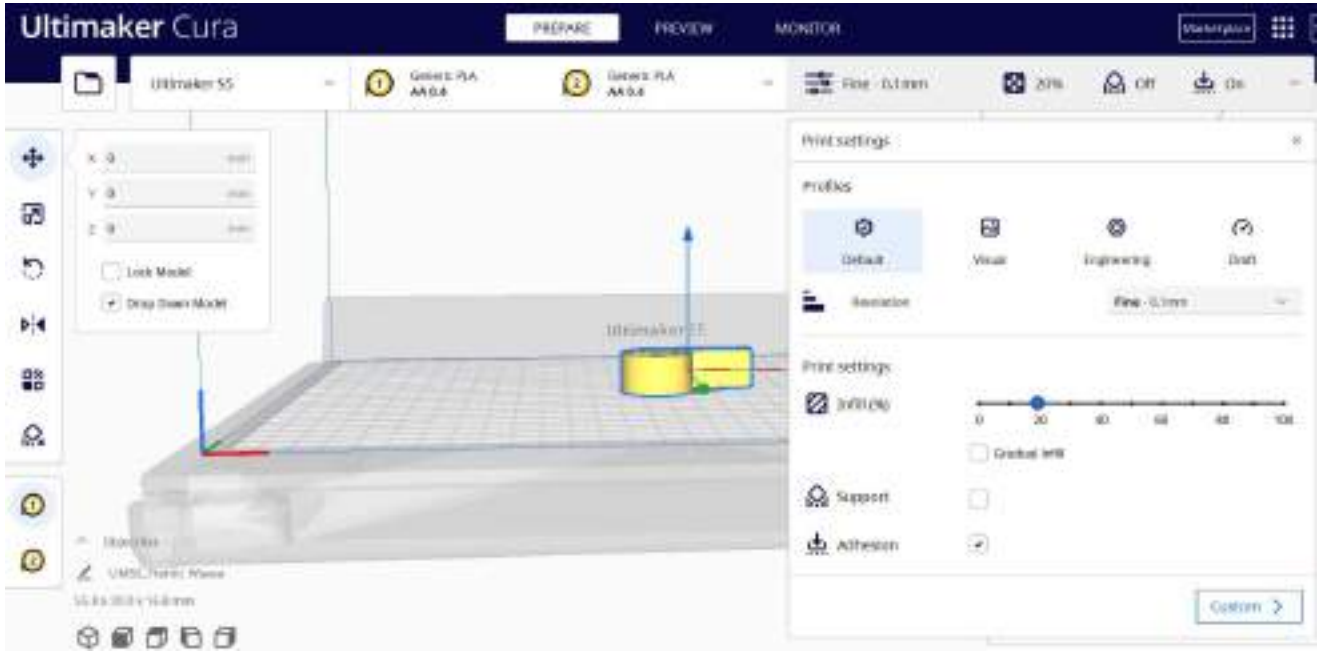

Sub-topic 1: Introduction to TinkerCAD online software & CURA slicing software

- Now, by pressing and holding the left click on our model we can move it anywhere we want on our bed.
- The left bar typically contains various options and tools that allow you to prepare and customize your 3D prints.
- Some of them are:
  - Move
  - Scale
  - Rotate
  - Mirror
  - Per Model Settings
  - Support Blocker

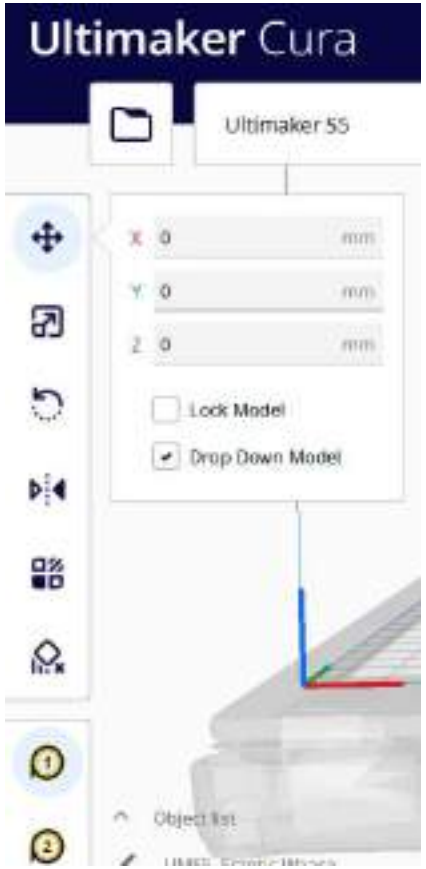

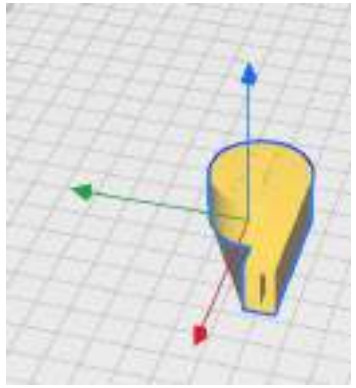

Sub-topic 1: Introduction to TinkerCAD online software & CURA slicing software

- On the right side of the screen we can locate the settings.
- Through the print settings you can change:
  - The infill (%)
  - Add support
  - Add adhesion

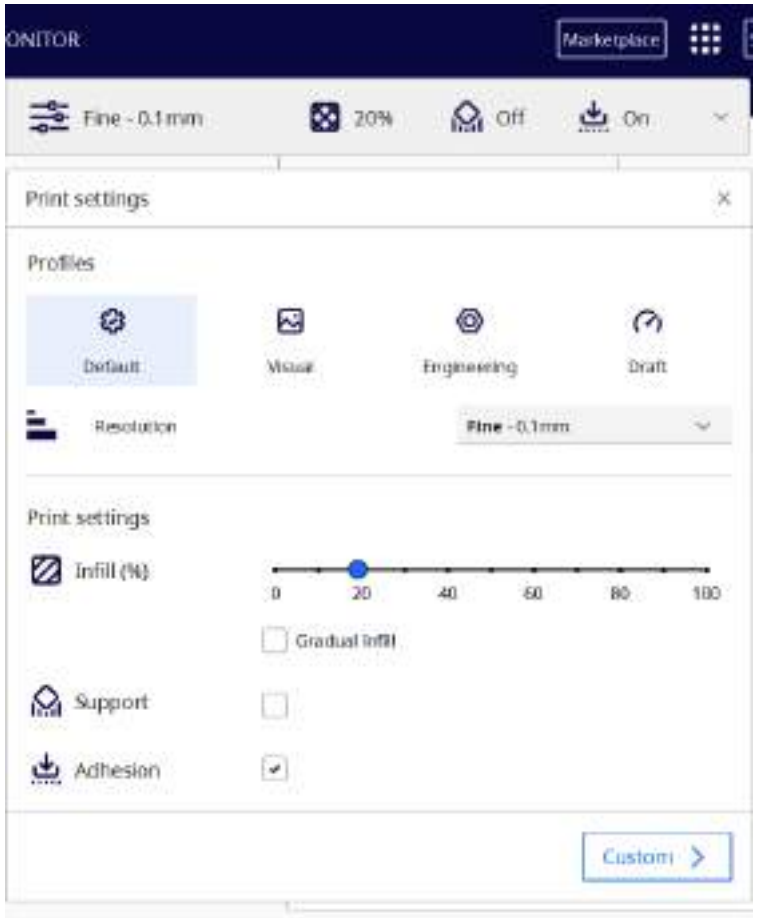

Sub-topic 1: Introduction to TinkerCAD online software & CURA slicing software

- After clicking on the slice button, the time and material needed for the 3D object to be printed will appear in the following window.
- By clicking at the “Save to Disk” tab, you can save this file to the USB as a .gcode and then place the USB to your printer.

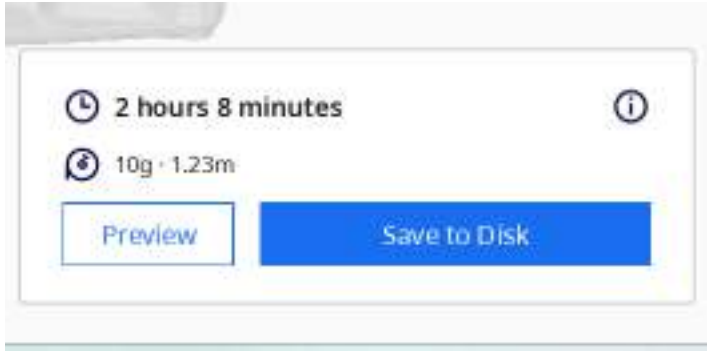

Learning outcomes

Sut-topic 2: Create your own design

Module 1: 3D Technologies Topic 3: Hands-on practice on software			
	KNOWLEDGE	SKILLS	ATTITUDES
	Sub-topic 2: Create your own design		
MOVERS	• How to use the TinkerCAD interface • How to add and customize different shapes • How to design the mobile phone stand	• Know how to use TinkerCAD • Know how to design a 3D object	• Functionality • Simplicity • Durability • Accessibility • Sustainable design

Sub-topic 2:Create your own design

- This topic will mainly focus on how to create a 3D design through TinkerCAD software.
- By the end of this task the student will gain knowledge on how to design a telephone stand.

Sub-topic 2:Create your own design

- To begin with, the student must access the TinkerCAD account as it is shown in sub-topic 1.
- Then must click on the tab “Designs” and then “Create”, “3D Object”.
- The student must see the environment below.

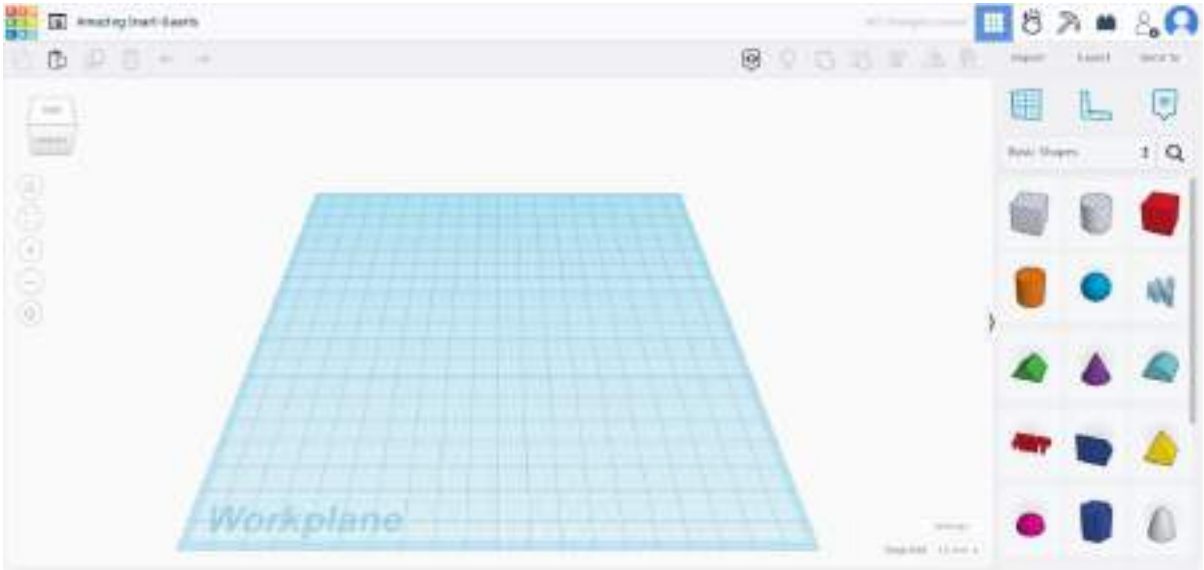

Sub-topic 2:Create your own design

- First we can change the name of the project to “phone stand”.
- To do this, locate the name of the project at the top of the page.
- Click on it and write the new name.

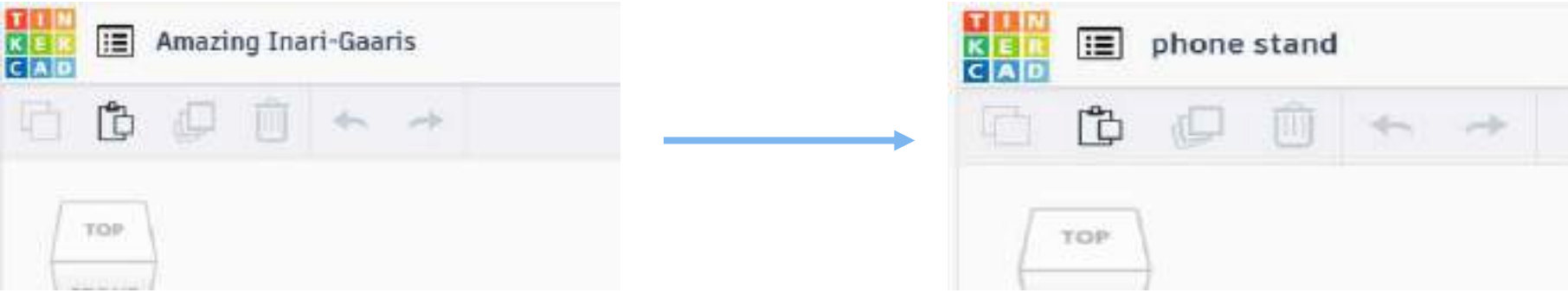

Sub-topic 2:Create your own design

- To start with the creation of our design, locate the shapes on the right side of the screen.
- Then select the “box” shape from the basic shapes, drag and drop it to the workplane.

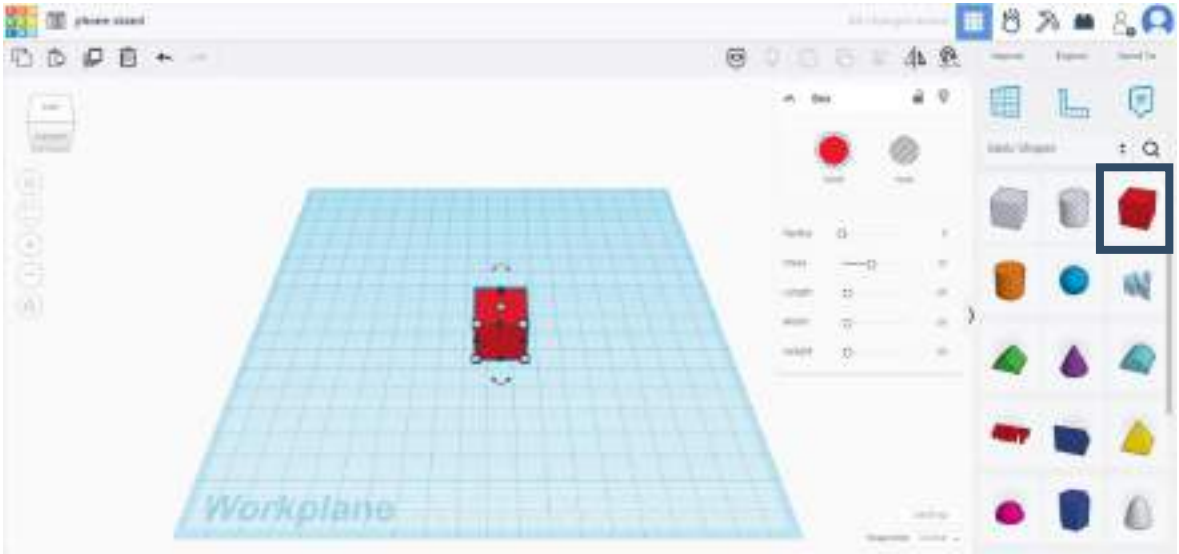

Sub-topic 2:Create your own design

- To start with the creation of our design, locate the shapes on the right side of the screen.
- Then select the “box” shape from the basic shapes, drag and drop it to the workplane.
- Change the dimensions of width to 10mm, the length to 90mm and the height to 80mm.

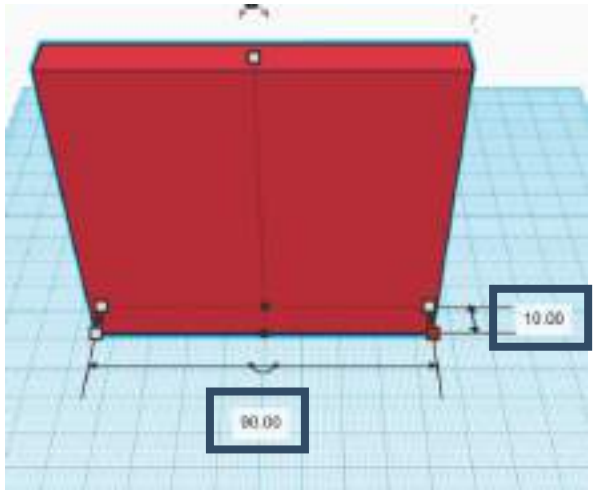

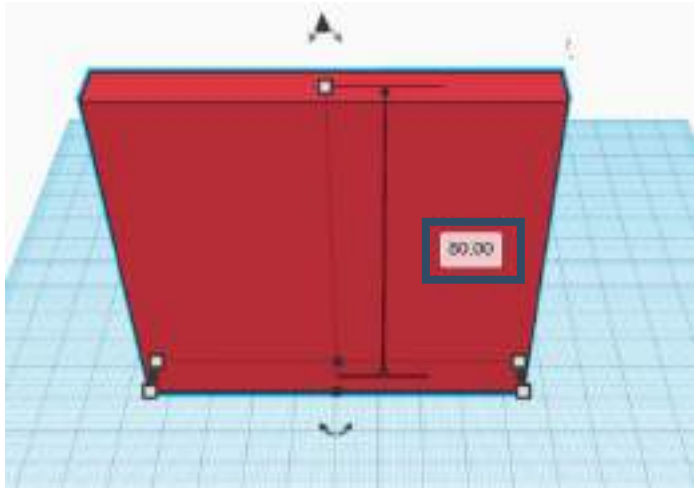

Sub-topic 2:Create your own design

- Then select the “box” shape from the basic shapes, drag and drop it to the workplane.
- Change the dimensions of width to 40mm, the length to 90mm and the height to 80mm.

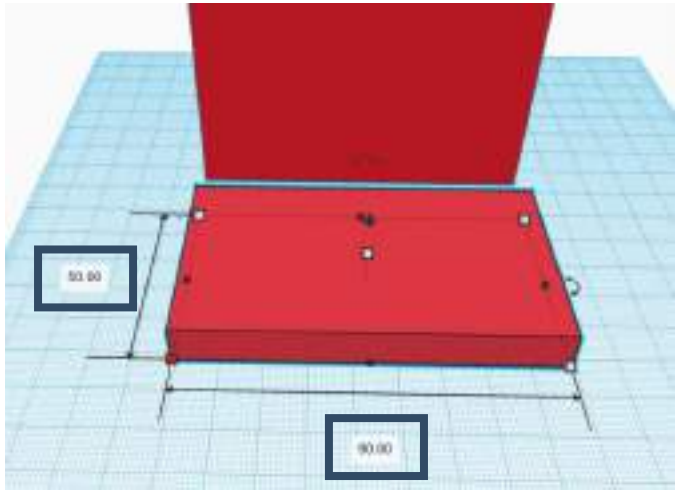

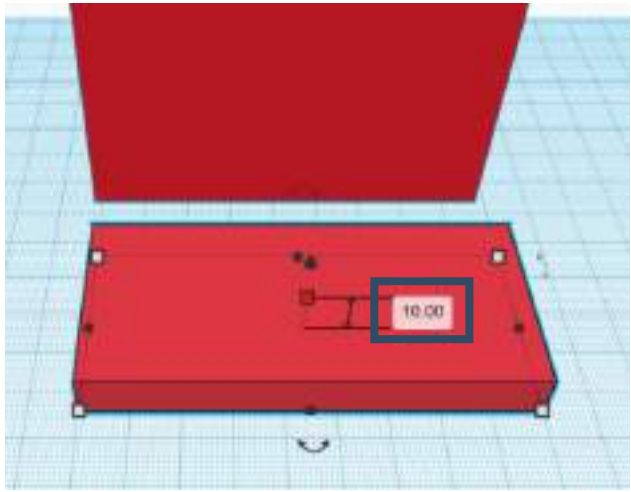

Sub-topic 2:Create your own design

- After adding those 2 shapes and changing their dimensions, we need to connect them.
- First select both of the shapes and click on the align tab. Bullets will appear on the shapes. Click the bullets that are shown below to align the shapes.

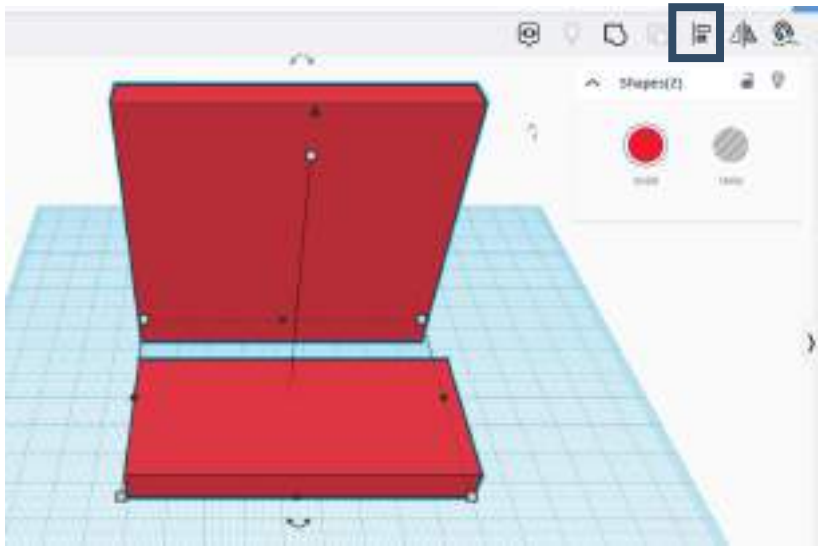

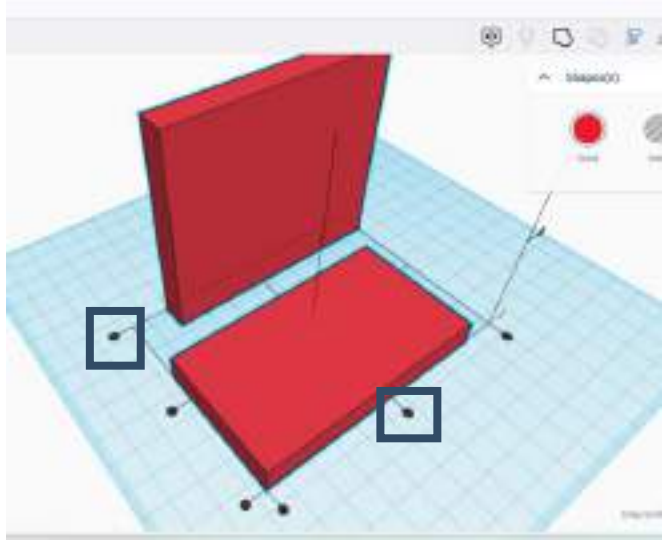

Sub-topic 2:Create your own design

- After aligning those 2 shapes, now we must group them to create 1 shape.
- To group them, we must select both of the shapes and click on the group tab. After clicking the group tab, 1 shape will be created.

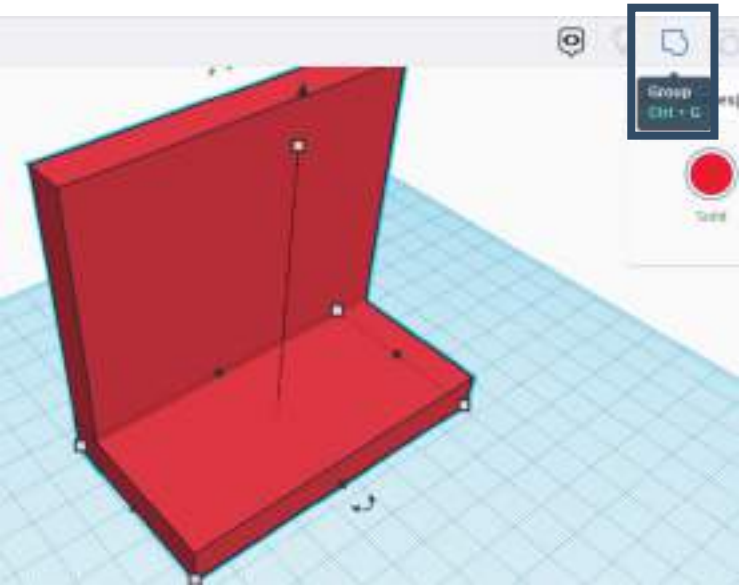

Sub-topic 2:Create your own design

- Finally, we have to select another “box” shape from the basic shapes.
- Change the dimensions of width to 10mm, the length to 90mm and the height to 25mm.

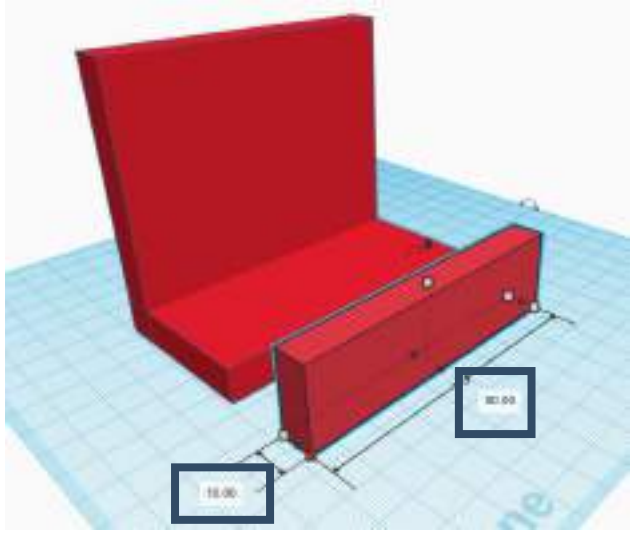

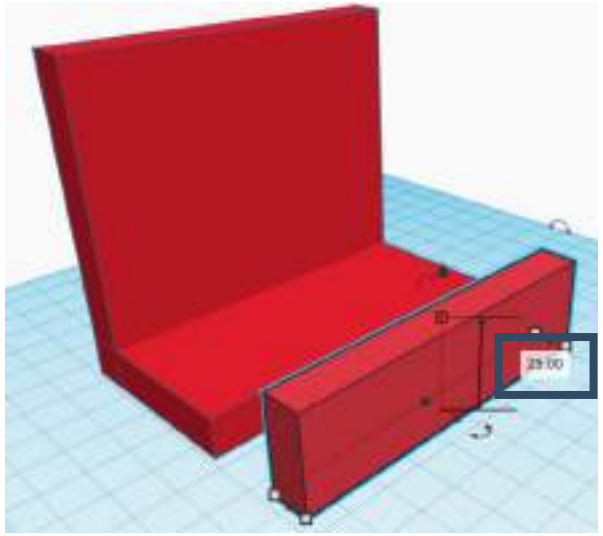

Sub-topic 2:Create your own design

- We have to do the alignment process once again for the new shape.
- Select both of the shapes and click on the align tab. Bullets will appear on the shapes. Click the bullet that is shown below to align the shapes.
- Then manually move the new shape to touch the other shape.

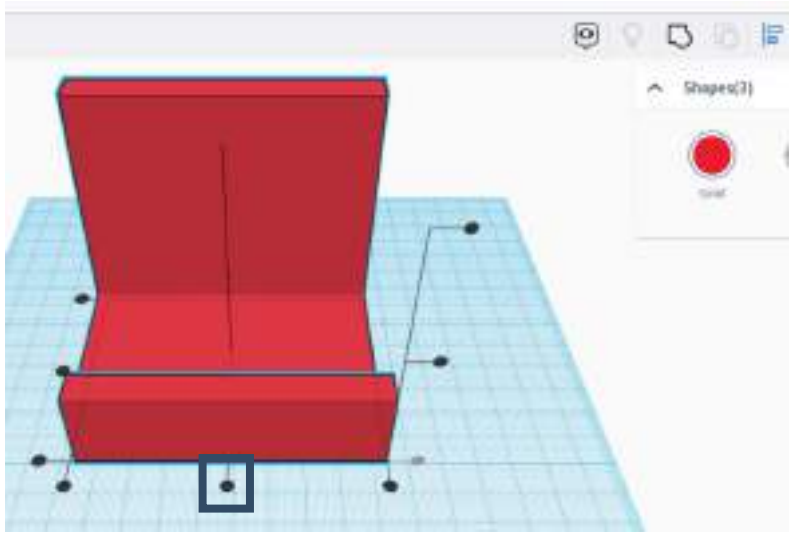

Sub-topic 2:Create your own design

- To group them, select again both of the shapes and click on the group tab. After clicking the group tab, 1 shape will be created.

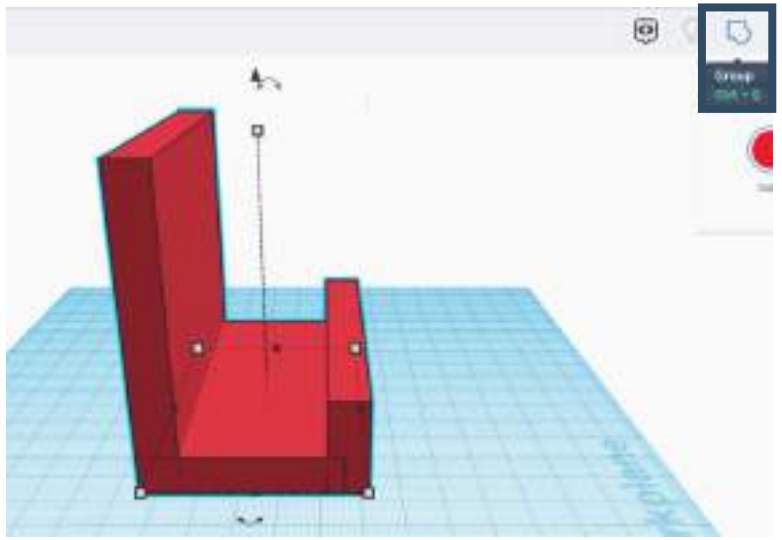

Sub-topic 2:Create your own design

- After creating the phone stand, we can write a text on it.
- Click on the “text” at basic shapes. Write the text you want to add on the shape.

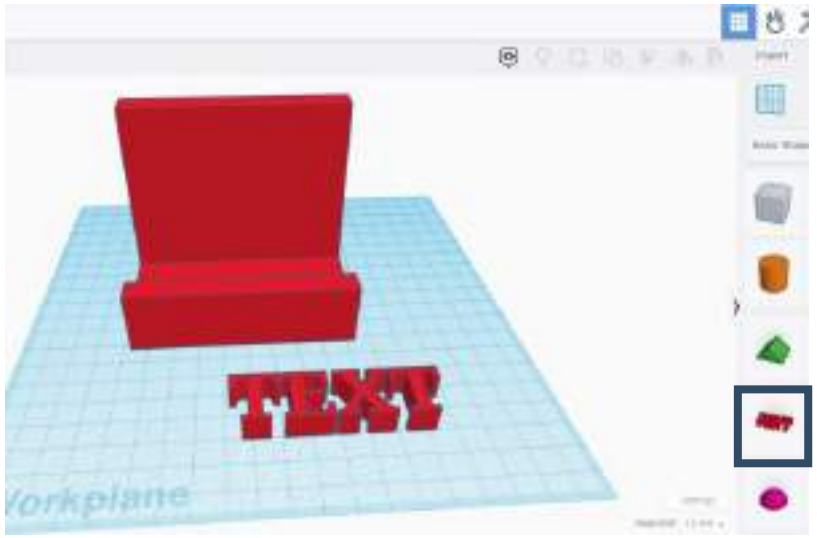

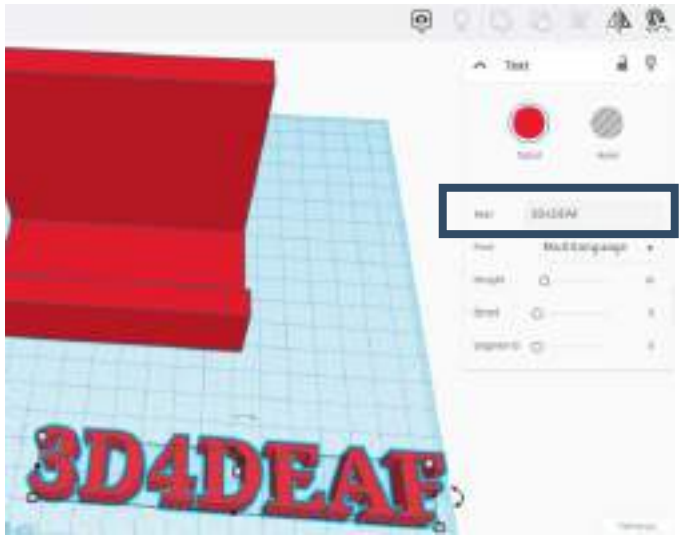

Sub-topic 2:Create your own design

- After creating the phone stand, we can write a text on it.
- Click on the “text” at basic shapes. Write the text you want to add on the shape. Change the dimensions of width to 20mm, the length to 70mm and the height to 5mm. To move the text above the ground, use the arrow shown on the image below.

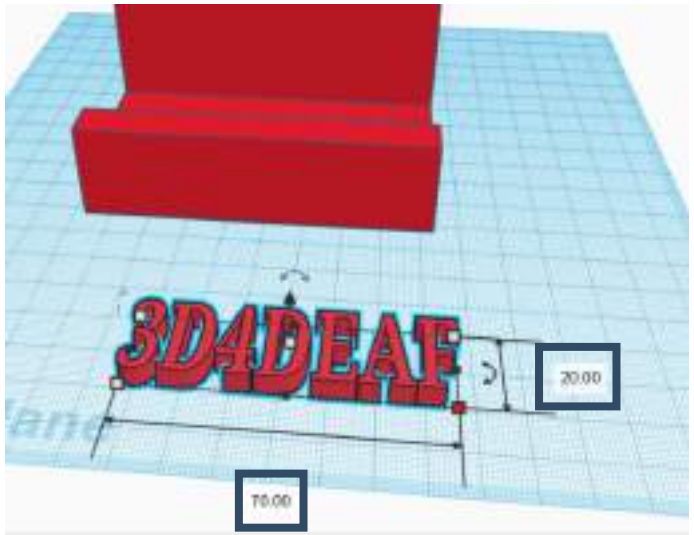

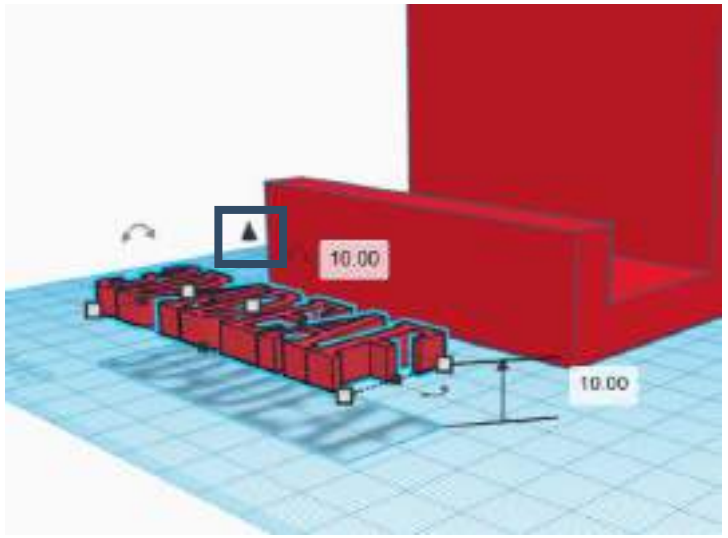

Sub-topic 2:Create your own design

- You can rotate the text by selecting the arrow of the next image.
- Rotate it by 90 degrees and raise it up until it reaches the desired location. Then place it on the shape and then group them.

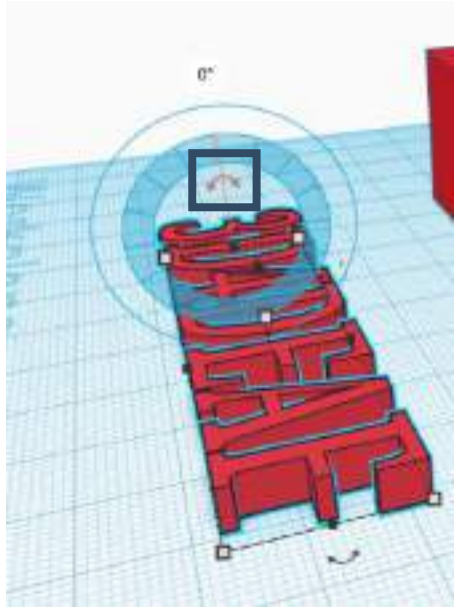

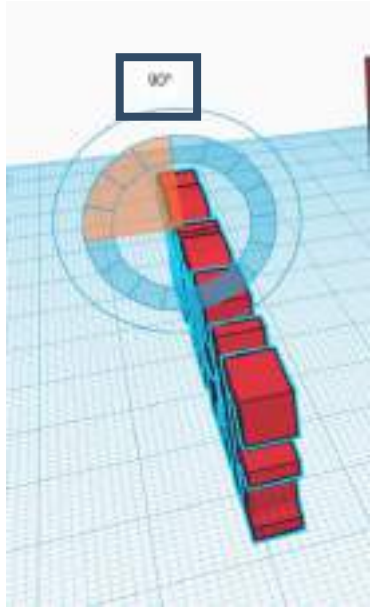

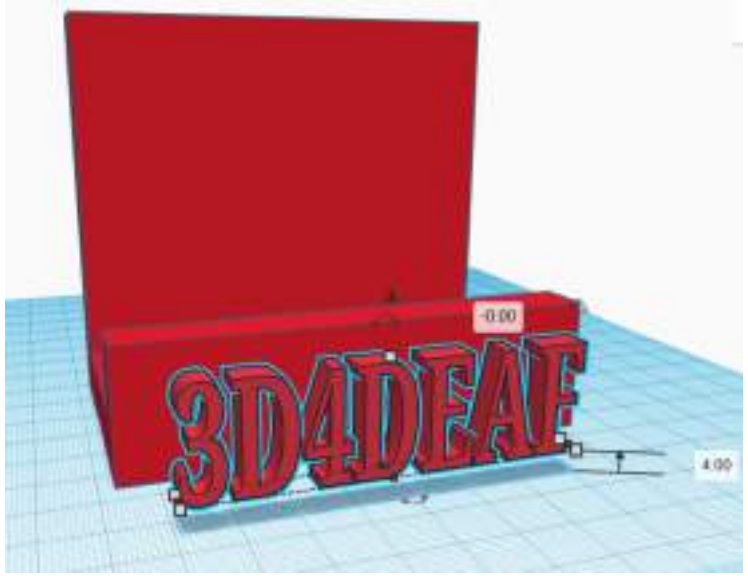

Sub-topic 2:Create your own design

- Finally, the phone stand is ready.

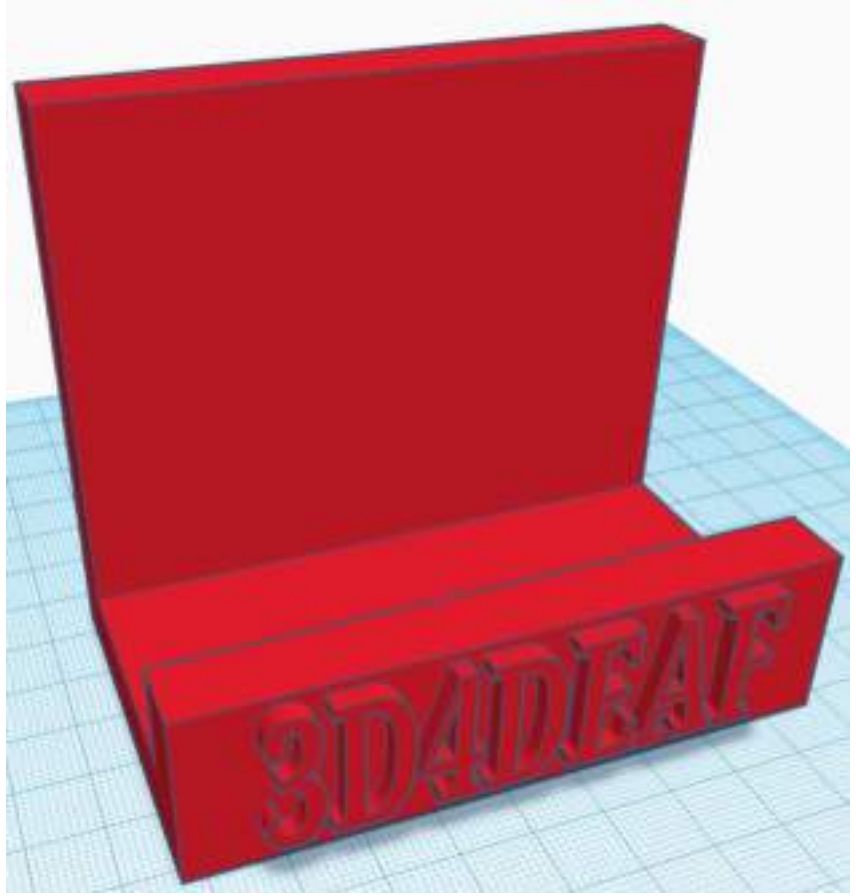

Learning outcomes

Sut-topic 3: 3D printing (finalization)

Module 1: 3D Technologies Topic 3: Hands-on practice on software			
	KNOWLEDGE	SKILLS	ATTITUDES
	Sub-topic 3: 3D printing (finalization)		
EXPERTS	• How to use the TinkerCAD interface • How to add and customize cube shape • How to use Cura software to slice the 3D object • How to print the 3D object • How to use this object to store tools	• Know how to use TinkerCAD • Know how to use Cura • Know how to pint a 3D object • Know how to finalize the object	• Functionality • Simplicity • Durability • Accessibility • Sustainable design

Sub-topic 3:3D printing (finalization)

- This topic will mainly focus on how to create a 3D toolbox.
- After creating the toolbox, we will use Cura software to slice it and print it through a 3D printer.

Sub-topic 3:3D printing (finalization)

- For the toolbox we have to add a “box” first at the workplane.
- Change the dimensions of width to 80mm, the length to 100mm and the height to 50mm.

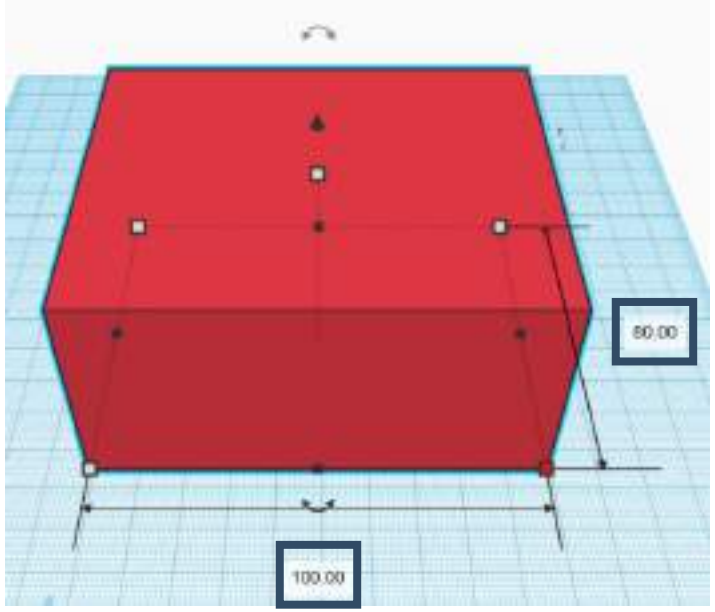

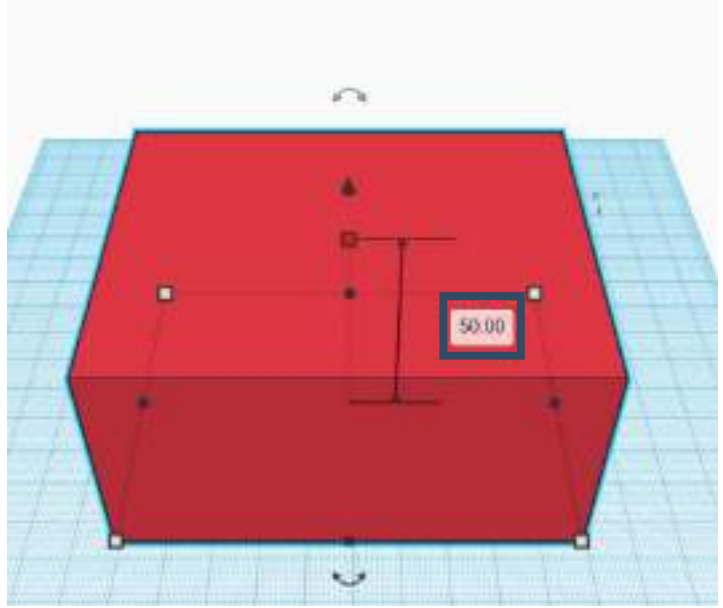

Sub-topic 3:3D printing (finalization)

- The next step is to create a hole in the box. Select the “Hole box” from the basic shapes.
- Change the dimensions of width to 70mm, the length to 90mm and the height to 45mm.

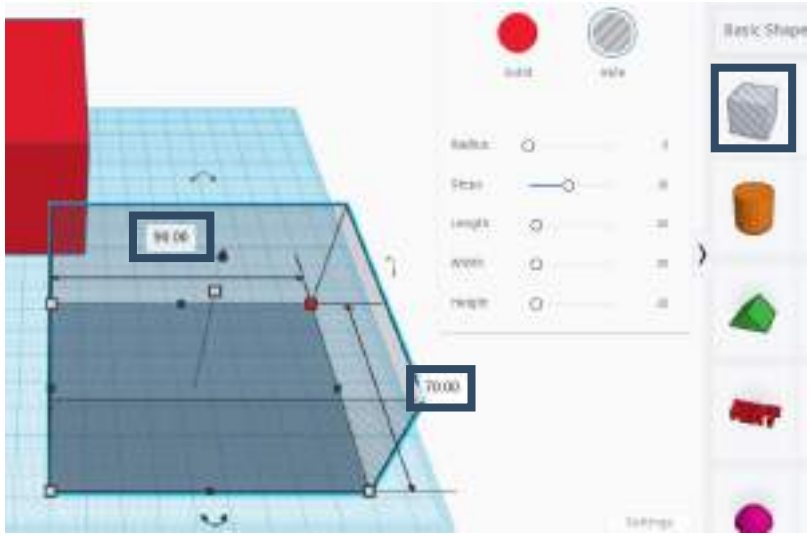

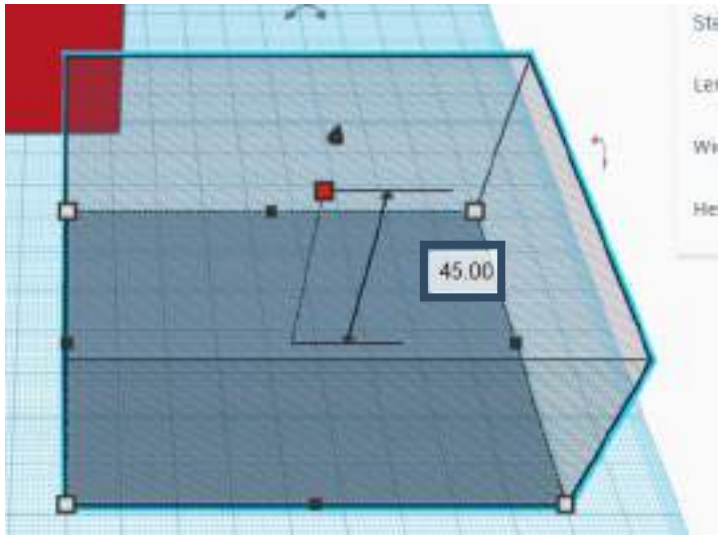

Sub-topic 3:3D printing (finalization)

- Select both shapes and click on the align tab.
- Click the 3 bullets that are shown below to align the shapes.
- Them click on the group tab to create 1 unite shape.

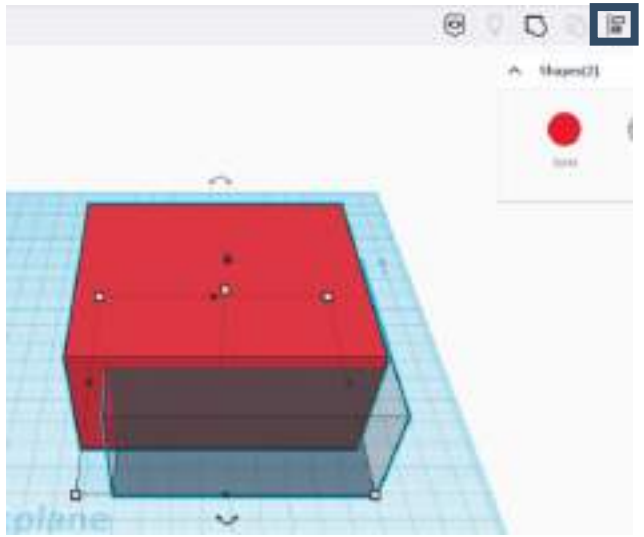

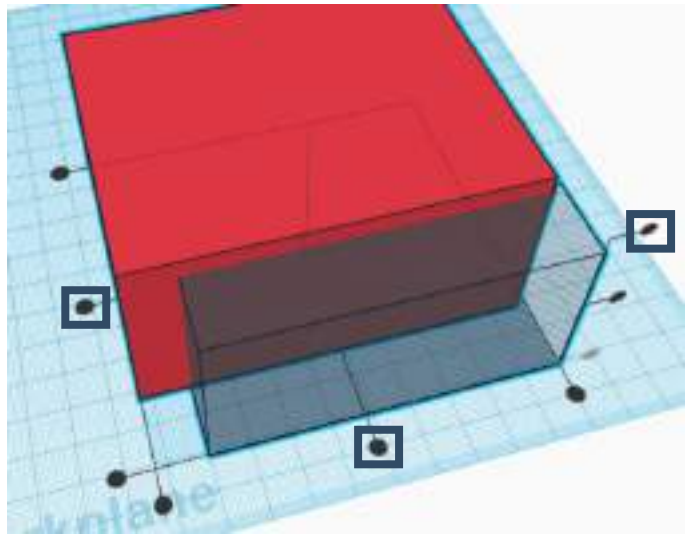

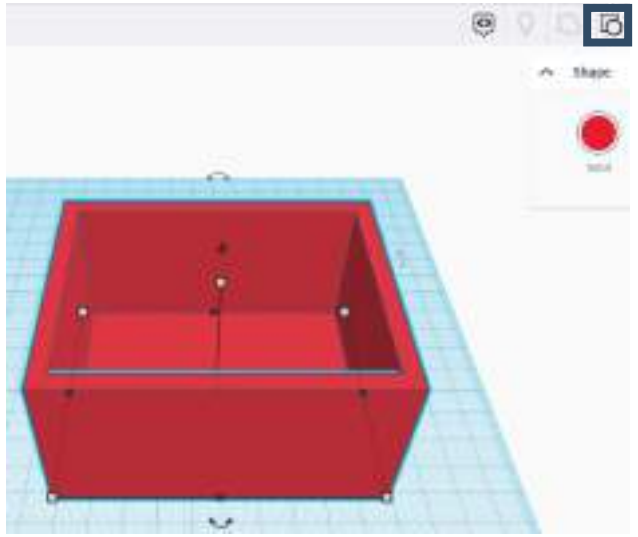

Sub-topic 3:3D printing (finalization)

- To separate the box into 4 places, select 2 box shapes from basic shapes.
- Change the dimensions of the first box to a width of 4mm, a length of 100mm and a height of 40mm. Change the dimensions of the second box to a width of 80mm, a length of 4mm and a height of 40mm.

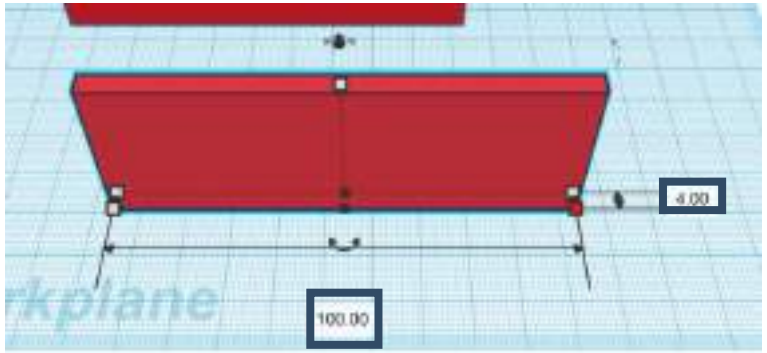

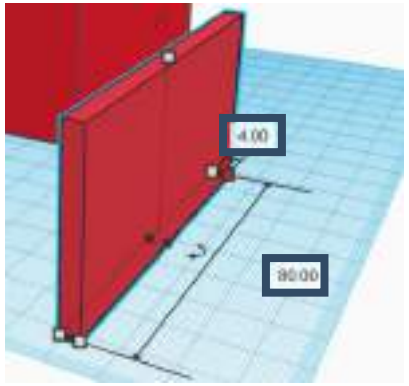

Sub-topic 3:3D printing (finalization)

- Select the 2 shapes and click on the align tab as shown below;
- Click the 2 bullets that are shown below to align the shapes;
- Them click on the group tab to create 1 unite shape;
- Repeat this process with the second box as shown below.

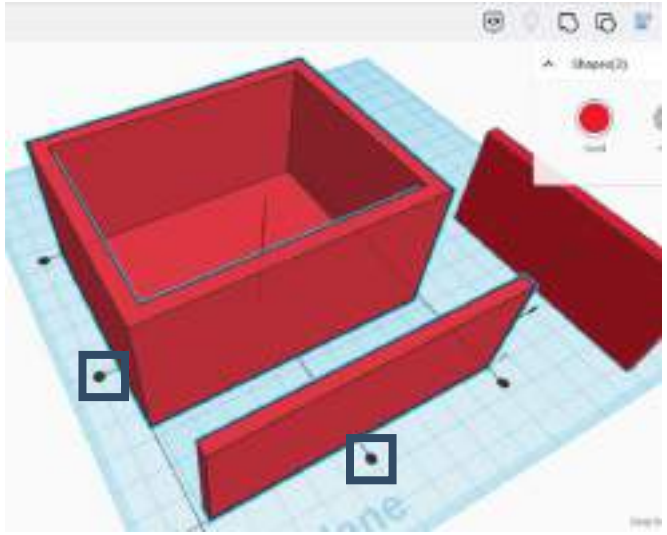

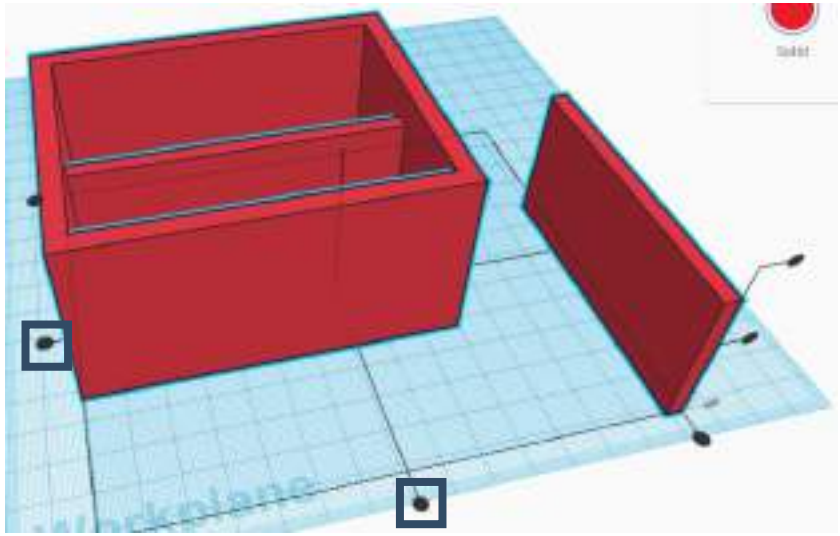

Sub-topic 3:3D printing (finalization)

- This is the unite 3D object we need to have at this point.

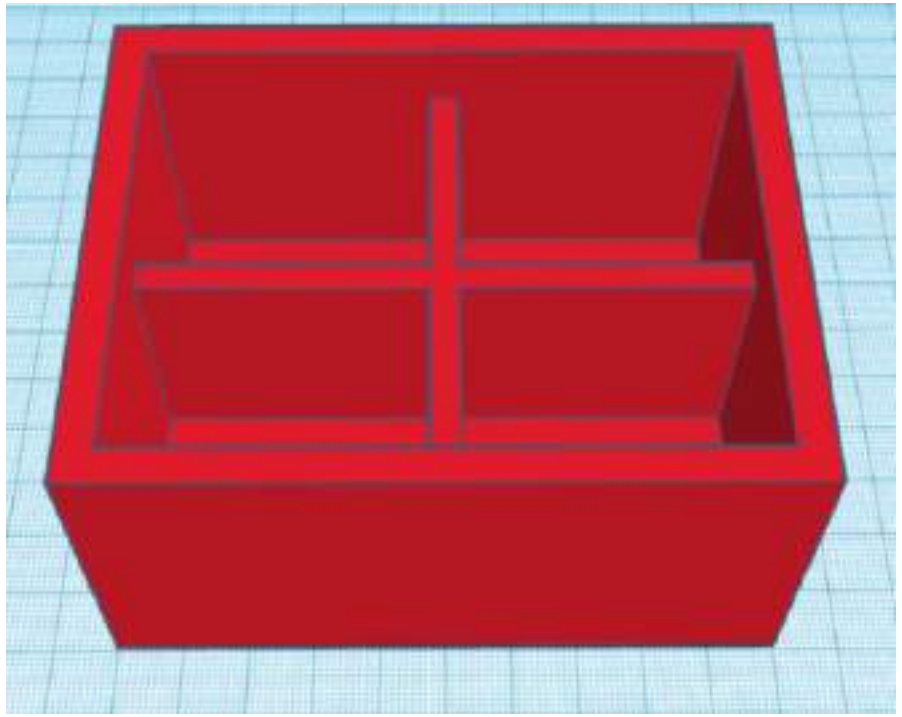

Sub-topic 3:3D printing (finalization)

- To create the handle on the toolbox, select “round roof” shape from basic shapes. Then select the “Hole” option.
- Then select the shape, click on the mirror tab, and select the arrow to flip the shape. Then rotate it by 90 degrees as shown below.

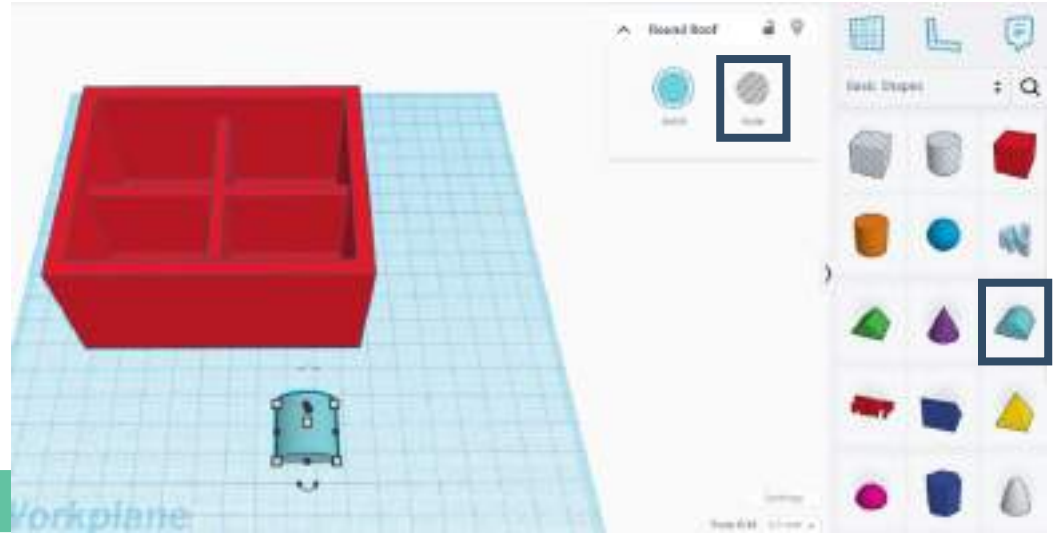

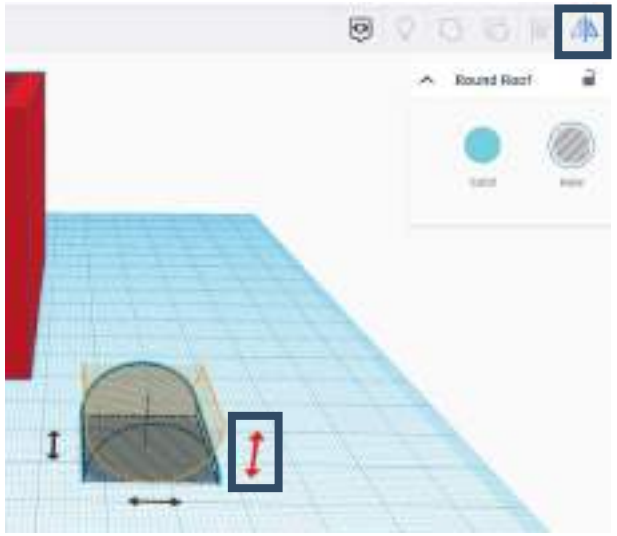

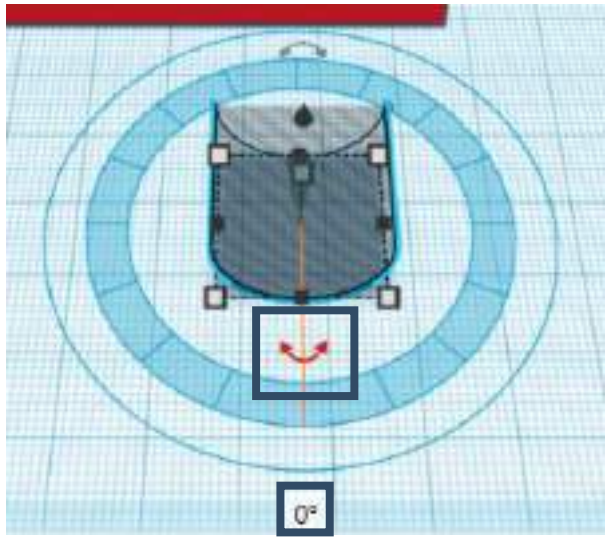

Sub-topic 3:3D printing (finalization)

- Change the dimensions as shown below.
- Raise the shape by 30mm and align in to the centre of the box.

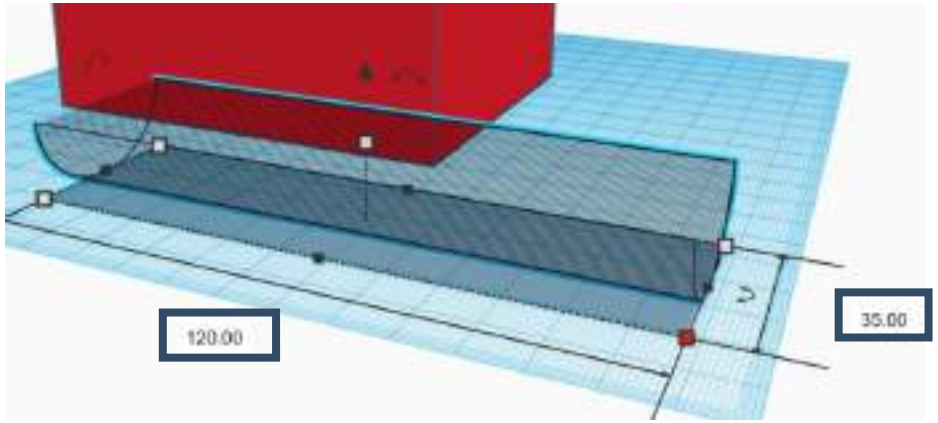

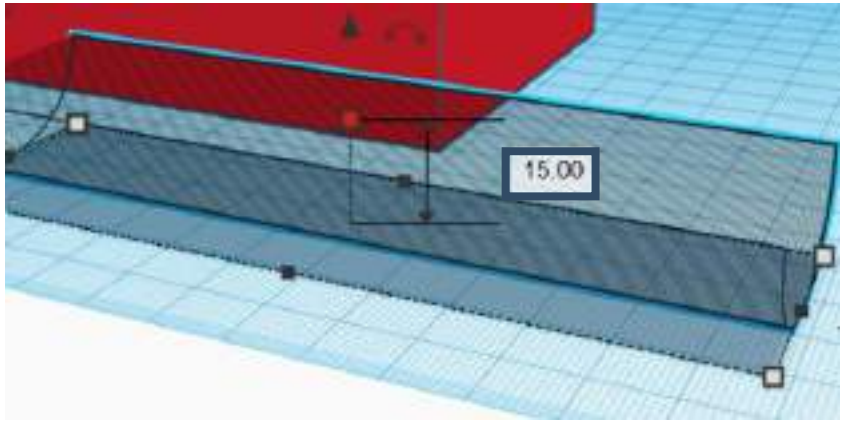

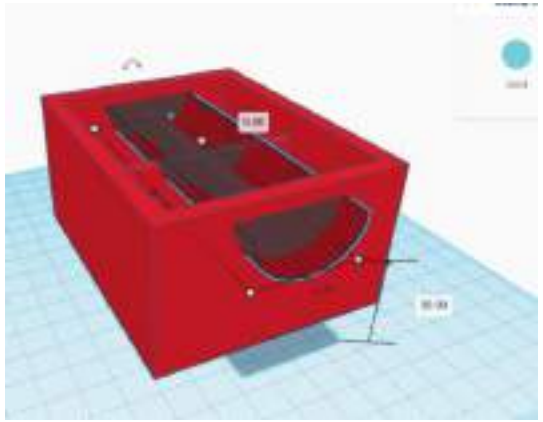

Sub-topic 3:3D printing (finalization)

- After grouping all the shapes together, the final shape will look like this.

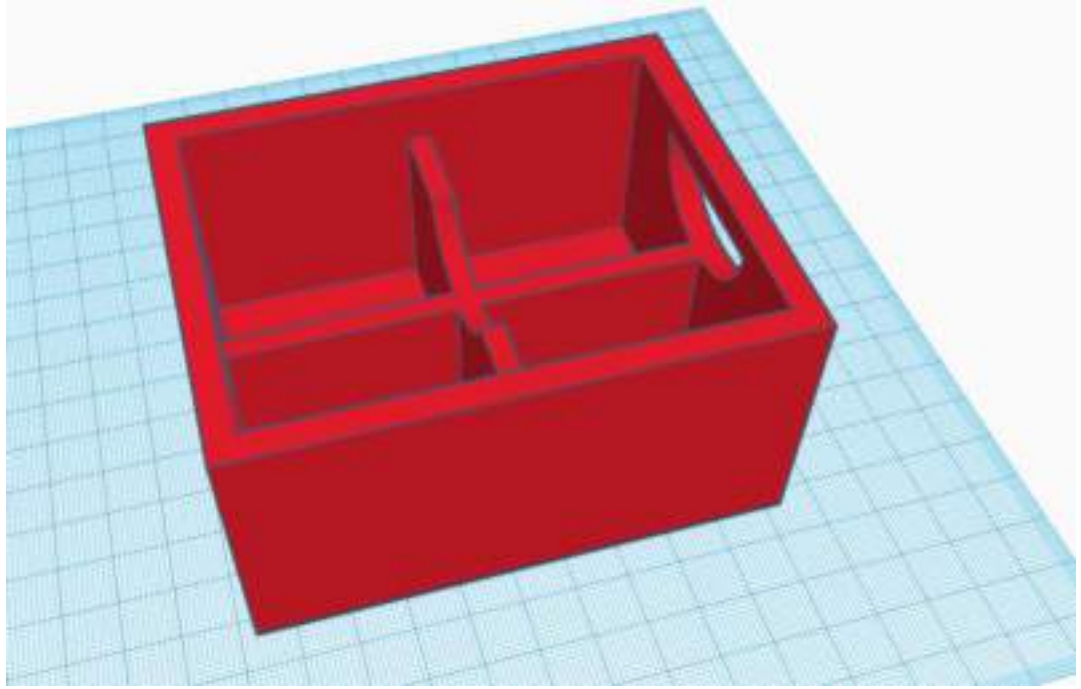

Sub-topic 3:3D printing (finalization)

- Finally we can add a text to the toolbox.
- Select the “text” shape and type your text. It is better for the toolbox to make the text a hole to avoid extra support in printing process.

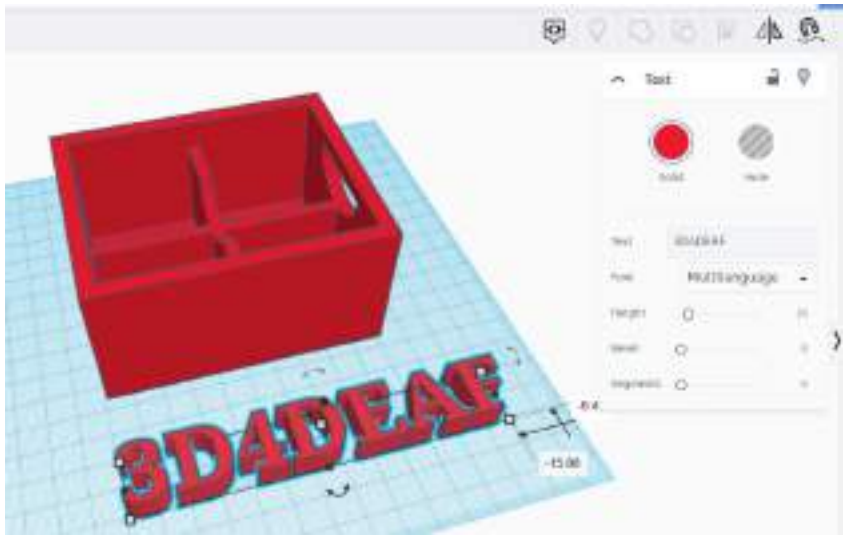

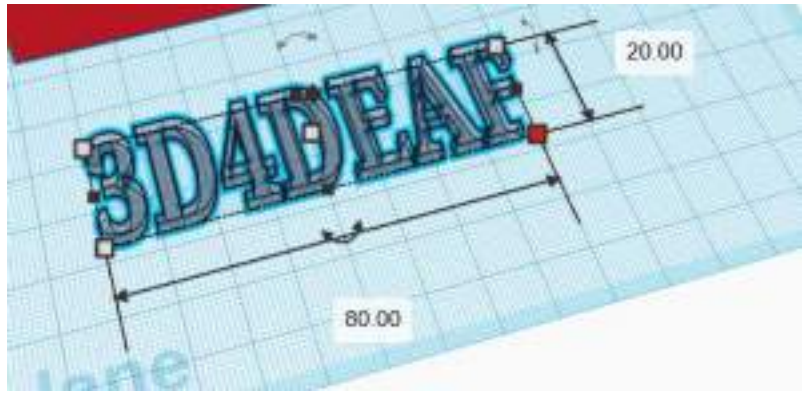

Sub-topic 3:3D printing (finalization)

- Add the right dimensions to fit the surface of the toolbox, and rotate it by 90 degrees.
- To align it with the toolbox, select the 3 bullets that are shown below.

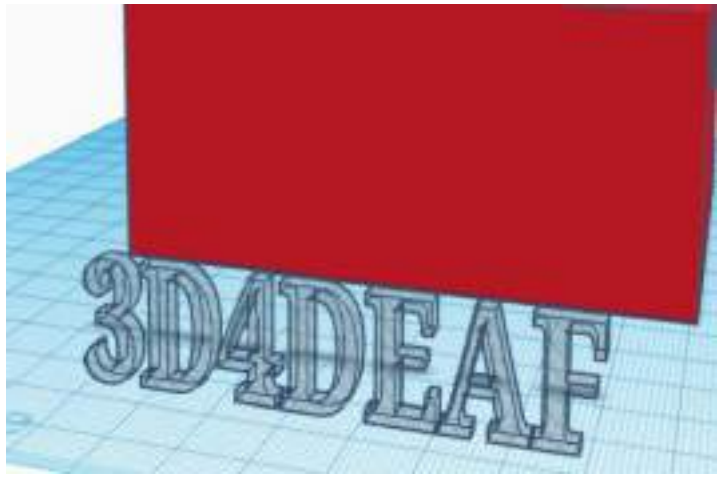

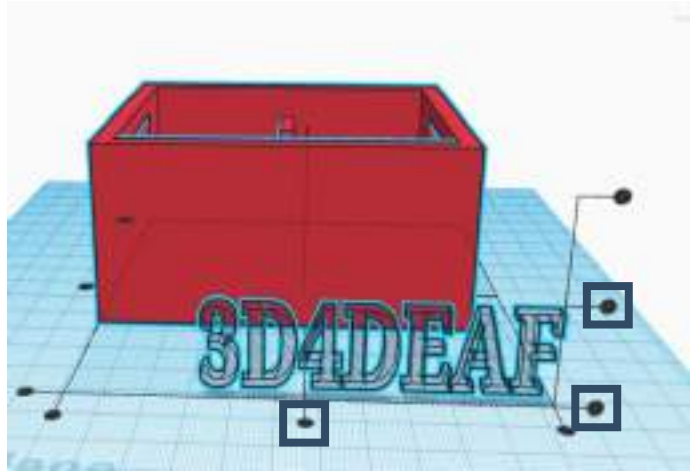

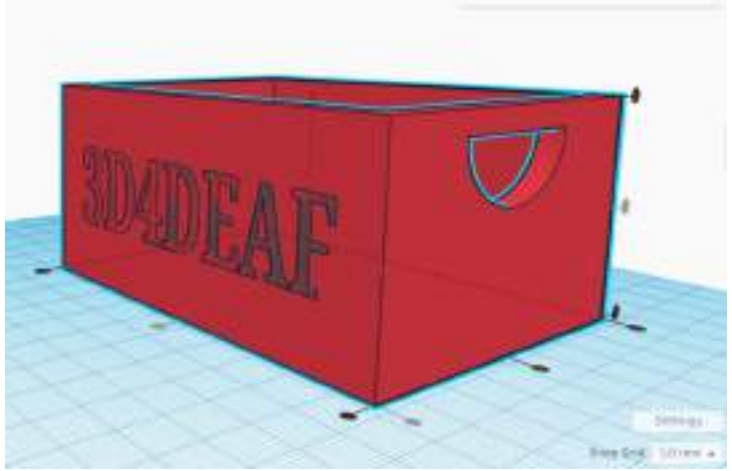

Sub-topic 3:3D printing (finalization)

- Finally group all shapes together and we have the final 3D object.
- This object is automatically saved on TinkerCAD and we can edit it.

Sub-topic 3:3D printing (finalization)

- Now we have to export that 3D object in a .STL format;
- Locate and select the “Export” tab;
- Then select the .STL and it will be downloaded to your computer.

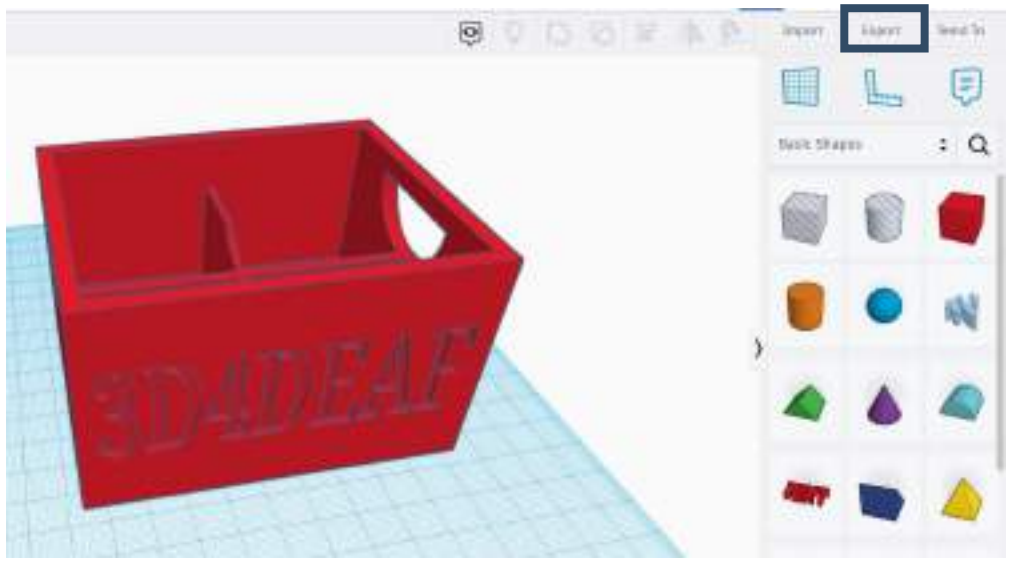

Sub-topic 3:3D printing (finalization)

- The next step is the slicing software.
- Open Cura software. Select the file tab and locate the .stl file
- After selecting the toolbox it will be imported into the Cura area

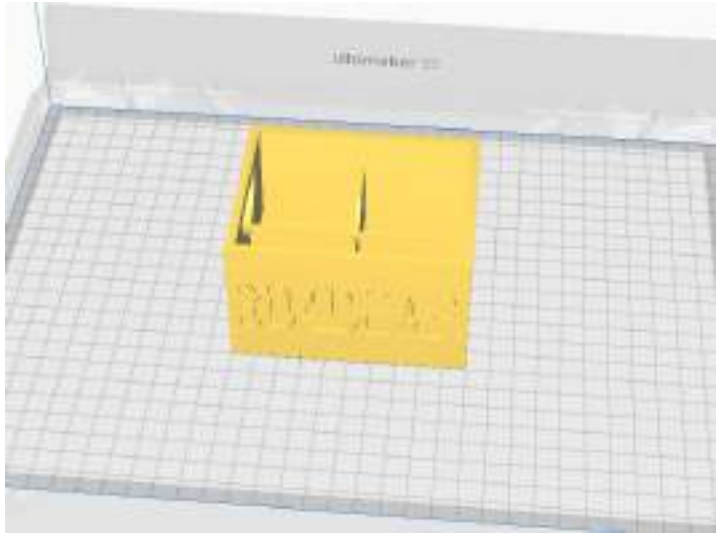

Sub-topic 3:3D printing (finalization)

- To print the toolbox we have to select some printing settings.
- Choose the infill(%), which is used to fill the empty space inside a 3D-printed object, select if the object needs support or not and adhesion (raft) or not.
- After finishing with the printing settings, select the tab “Slice”.

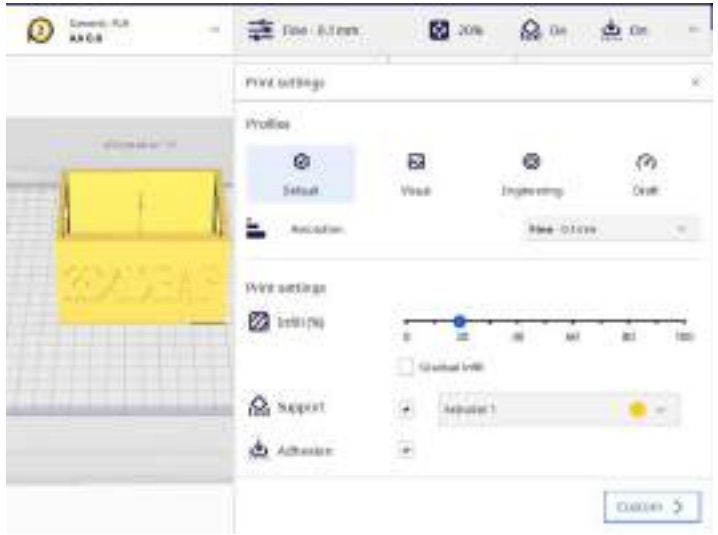

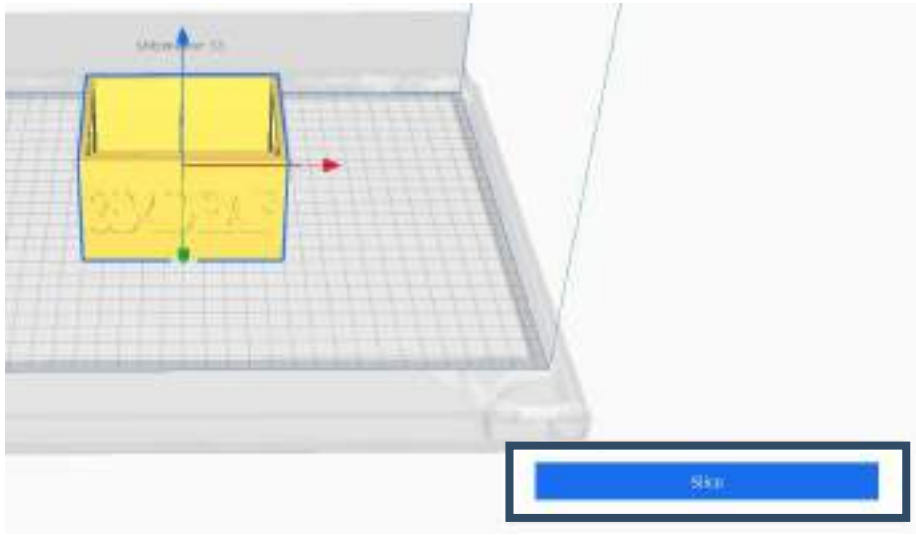

Sub-topic 3:3D printing (finalization)

- The slicing tab, will create a
- After clicking on the slicing tab, a window will appear on the screen.
- We can see the time and material (grams /meters) needed for the printing process. The time is calculated based on the settings we added.
- Also, we can preview the printing process by clicking on “Preview”
- Finally, we have to save the gcode to the USB by clicking on “Save to Disk”.

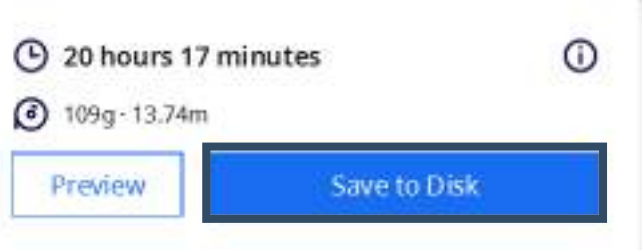

Sub-topic 3:3D printing (finalization)

- The preview mode gives the following outcome;
- With the right bar we can see how each layer is used to create that object;
- The bottom bar shows the movement of the nozzle at the selected layer;
- After reviewing the process select “Save to Disk”.

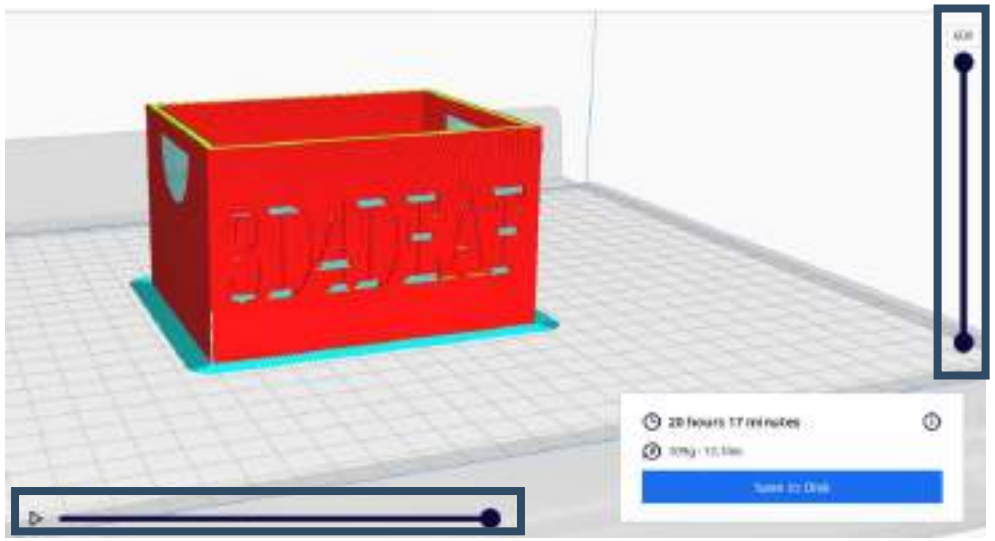

Sub-topic 3:3D printing (finalization)

- Take the USB with the saved gcode and place it in the 3D printer;
- Select the file and set the nozzle of the 3D printer to 210 degrees Celsius and the bed of the 3D printer to 60 degrees Celsius;
- The nozzle temperature may defer according to the material used;
- After 7 hours, the 3D object will be ready.in

Sub-topic 3:3D printing (finalization)

- To finalize the 3D object, we can use different materials.
- In this case, we can use <u>sandpaper</u> to scrap and a cuter remove the supports.

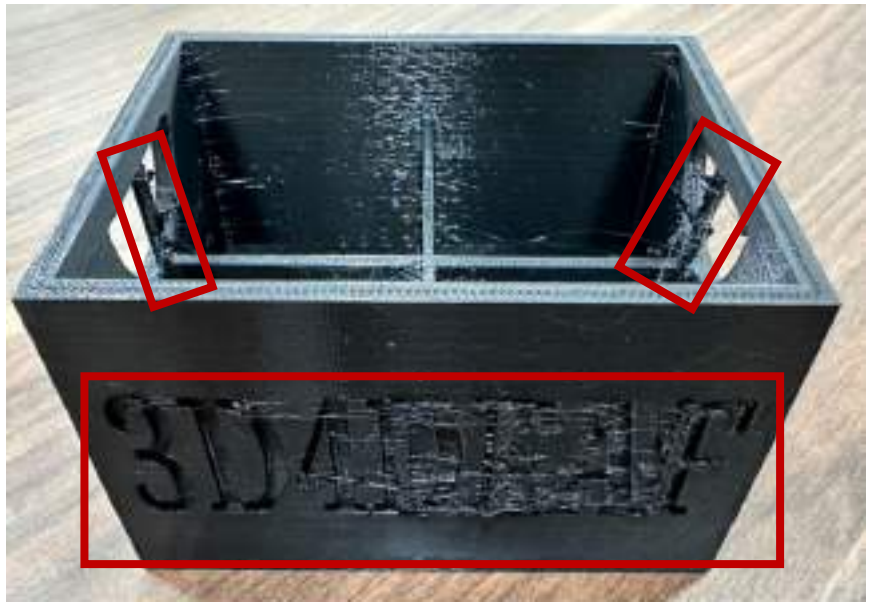

Glossary

- **Stl:** is the format that TinkerCAD generates in order to be readable on Cura software
- **Gcode:** is the format that Cura generates in order to be readable on the 3D printer
- **Nozzle:** a component of a 3D printer that melts the plastic in order to create a 3D object
- **Workplane:** is the area that we use to design our 3D object

Stay in touch with us

https://3d4deafproject.eu/

@3d4deaf

@3d4deaf

@3d4deaf

Funded by
the European Union

Funded by the European Union. Views and opinions expressed are however those of the author(s) only and do not necessarily reflect those of the European Union or the European Education and Culture Executive Agency (EACEA). Neither the European Union nor EACEA can be held responsible for them.

www.3d4deafproject.eu